NEW AFH STANDARD
PRESS BRAKE TOOLING

Edition 2017

CATALOG INDEX

CLICK ON YOUR PAGE LINK

- AMADA Quality ---------- 3
- NEW AFH - new tooling range ---------- 4-6
- Length of tool sets ---------- 7

PUNCHES
- Punches H120 86° ; 88° ; 90° ---------- 8-10
- Punches H120 60° ---------- 11
- Punches H120 26°; 30° ---------- 12
- Large R and flattening punches---------- 13
- Punches H90 ---------- 14-17
- Punches H160 ---------- 18-19
- Punches H70 ---------- 20-22
- Radius punches ---------- 23-25

DIES
- Insert dies 30° ---------- 26-28
- Insert dies 45° ---------- 29
- Insert dies 60° ---------- 30-31
- Insert dies 84° 86° 88° 90° ---------- 32-37
- Insert hemming and offset tools ---------- 38-39
- 2V Reversible dies ---------- 40-42
- Large V dies ---------- 43-45
- Hemming dies ---------- 46-48

MARK FREE BENDING
- Scratch free tools and accessories ---------- 49-52

HOLDERS, OTHER TOOLINGS AND ACCESSORIES
- Die holders ---------- 53-57
- Punch holders ---------- 58-60
- Other tools and accessories ---------- 61-65
- Special tools ---------- 66-69

Tables and graphs ---------- 70-95

AMADA Austria GmbH
Wassergasse 1
A-2630 Ternitz

Telefon: +43 2630 35170
Telefax: +43 2630 35165

E-Mail: info@amada.at
http://www.amada.at

Punch quality:
throughhardened from hot formed steel

- for long lasting high precision.
- surface hardness: **45-50 HRC**
- body strength: **1500 N/mm²**

Die quality : AMANIT®

- highest wear resistance on tool surface (**HRC 60-65**)
- low friction on the shoulder radii
- highest strength of the body - **1150 N/mm²**
- corrosion resistance

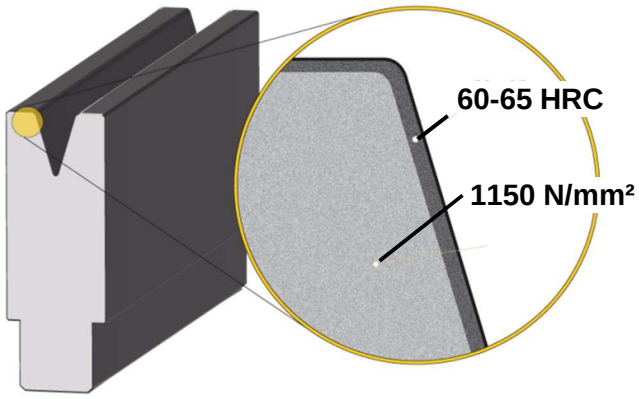

Tooling safety

With innovative heat treatment strategies and special testing techniques we are giving best durability to the steel, not only against failure caused by dead loads but also against fatigue caused by an infinite number of repeated loads.

Non corrosive coating on punch body

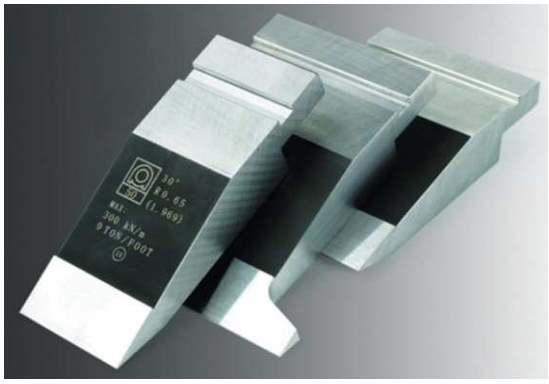

Single source

for machine, tooling and software

Complete laser marking

All Amada press brake toolings are completely marked by laser. Essential information like tooling type, angle, tonnage, length and radius are marked even on the sectional parts. Special markings are available at additional cost

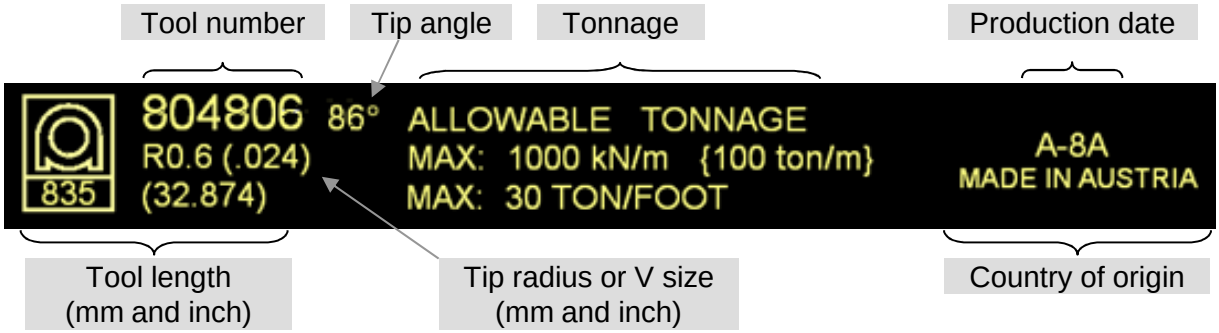

Standard tooling lengths:

L = 835mm ; S = 415mm ; Sectionalized = 800mm

Sectionalization :

Punch: 100ear; 10; 2 X 15; 20; 40; 50; 150; 300; 100ear = 800mm
Die : 100; 10; 2 X 15; 20; 40; 50; 150; 400 = 800mm

Special lengths are available at additional cost.

We are aware of the necessity to manufacture high professional tools. All our activities are targeting precision, performance and safety. Being the first company offering standard tools for unlimited staged bending or offering standard tools for more process reliability while boosting tool life with AMANIT ™ , we repeatedly demonstrated that all our activities are developed in close coordination with our customers, meeting the demands of the “best in class”.

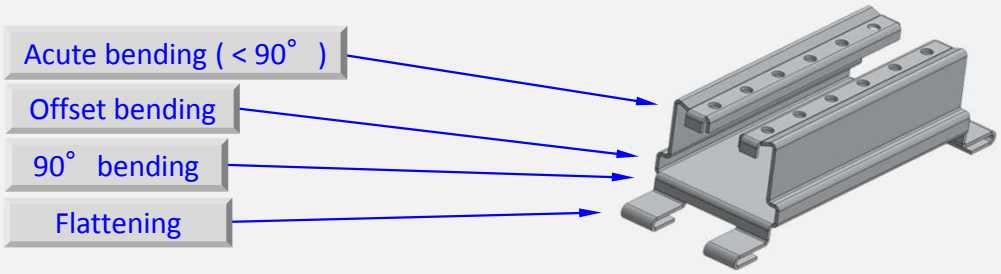

For example, the manufacturing of above electronic chassis requires 90-degree bends, acute bends, hems and offset bends. Using traditional bending, the operator would set up his press brake several times, handling the same part again and again. Press brake tools would play a significant role in this case. Because of their differing heights, they mostly allow only identical stages on same machine. As a result, several setup times have to be added to the processing cost.

Our New AFH tools are designed in order to enable the operator to setup multiple bends within one brake bed. While in the past the operator was more focused on tool alignments and how different tools could run at the same time, the New AFH now allows focusing on his sheet part, giving trouble-free, unlimited staging possibilities. Staged bending will make small runs cost-effective by simplifying complex bending sequences and handling each part only once.

Our punches are categorized into four levels, depending on their operating height. **H70mm, H90mm, H120mm and H160mm.** Our **staged dies** are offering stage bending in combination with acute bending, hemming and offset bending. NEW AFH is the successful unification of our powerful tooling systems like OneStroke or AFH with standard tools.

Example for tooling choice with H120 punches

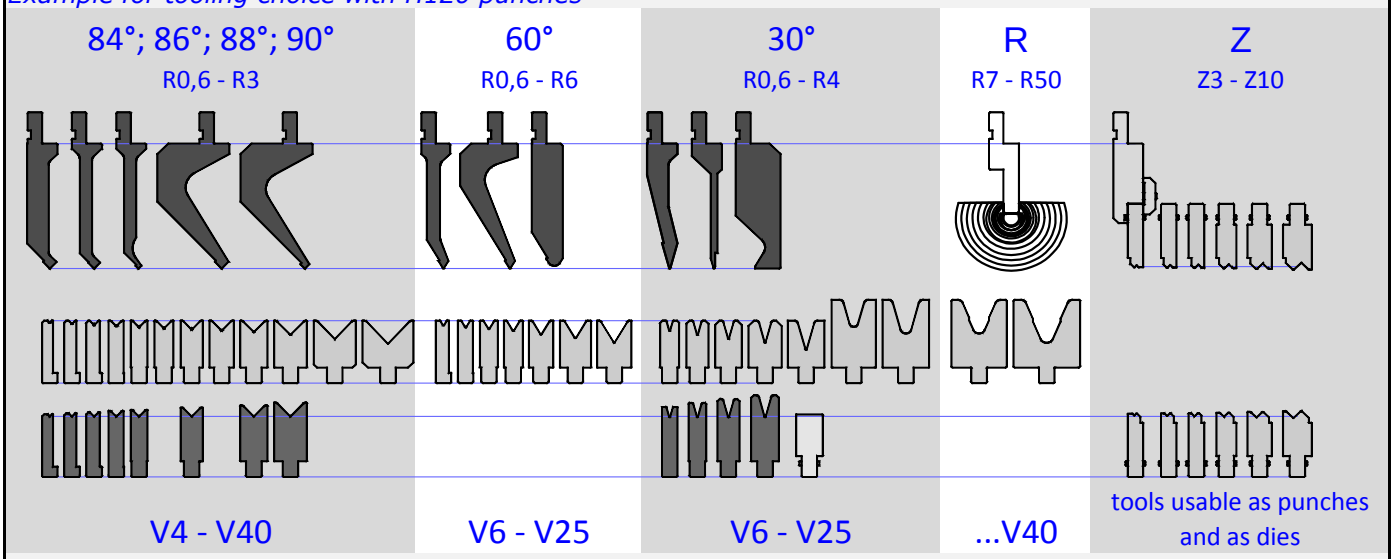

With stage bending, the operator can carry a complex part through multiple bends on different tool sets within one brake bed, and finish it after just one handling.

All tools for these options are available from stock.

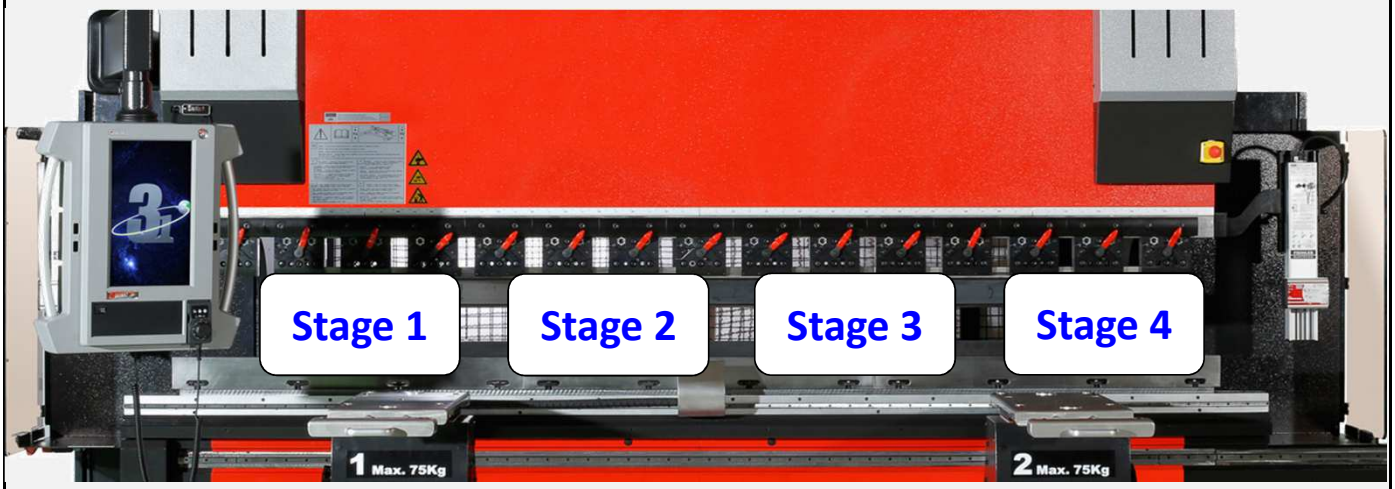

Stage engineering for sheet parts needing only **90°** bends :

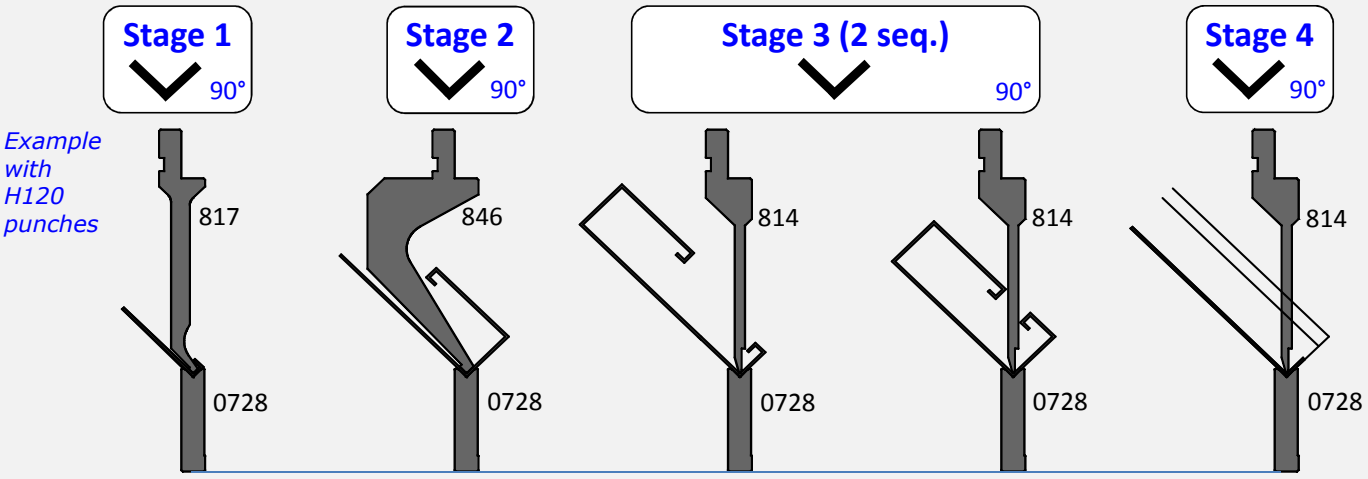

Note: - for perfect staging please use H120 punches (alternatively H90 or H160)
- all H120 - R0,6 punches are manufactured on same height (AFH principle)
- please use H60 dies from type 070… to 088…
- all above tools are able to build unlimited stages for 90° bends

Stage engineering for parts needing multiple bends :

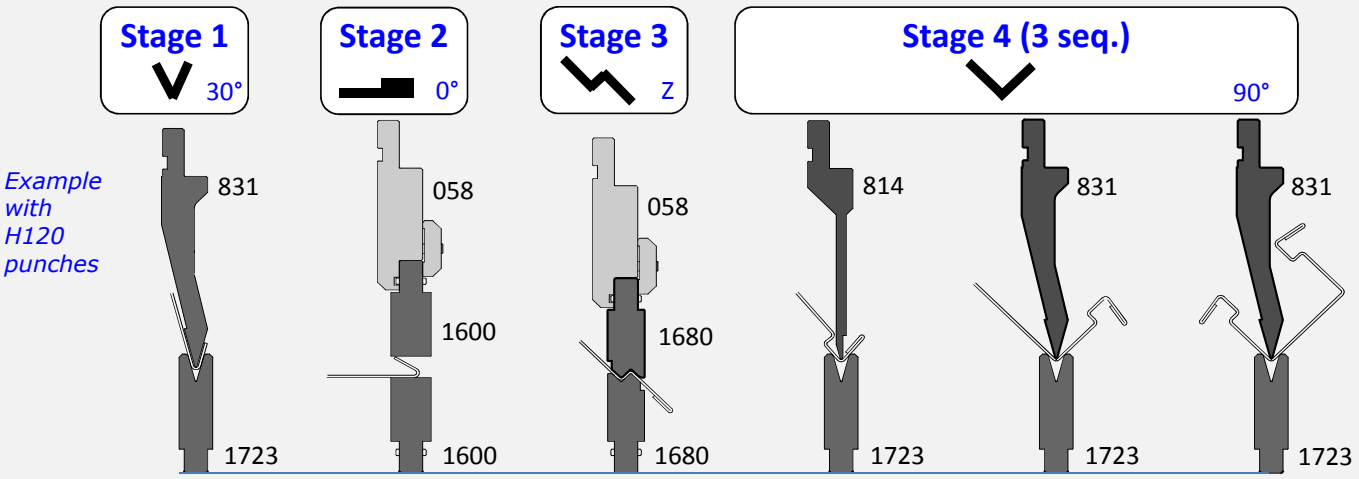

Note: - for perfect staging please use H120 punches (alternatively H90 or H160)
- please use dies from type 170… to 182…
- all staged dies paired with H120 (alternatively H90 or H160) punches have common shut height making brake setup fast and stage bending easy
- Common shut height tools available for 90°, sharp angle, hemming and offset bending

- Dies prepared for minimal offset values:

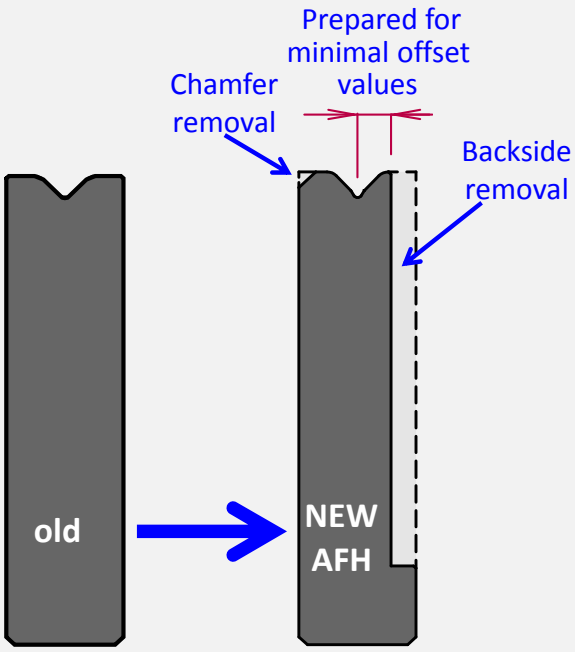

Examples:

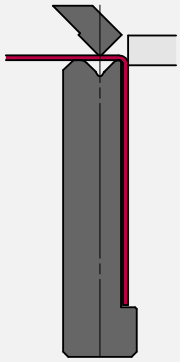
minimum offset values

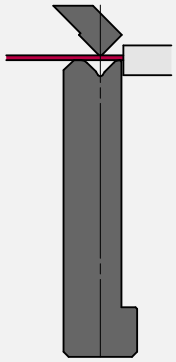
minimum flange widths

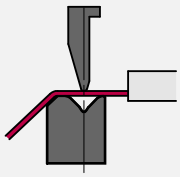
close to corners

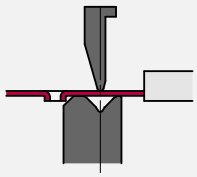
around tapped holes

- Use with angle measurement system :

To ensure the highest part accuracy from the very first bend, an angle measuring and correcting system like BIS, BIJ or BIL is necessary. All generated bend correction data from our angle measuring systems are calibrated with NEW AFH tools.

- Enlarges return bend area around the punch
- Eases software success of Dr.ABE_BEND
- Prevents mistakes due to same punch height
- Quick change in combination with AGRIP clamps

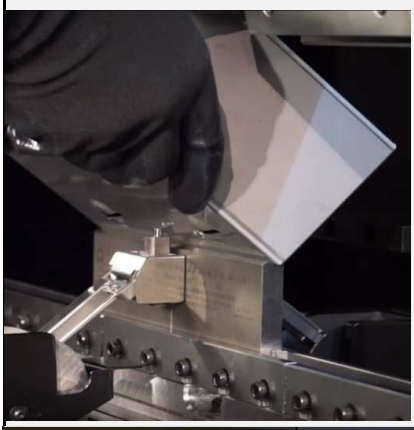

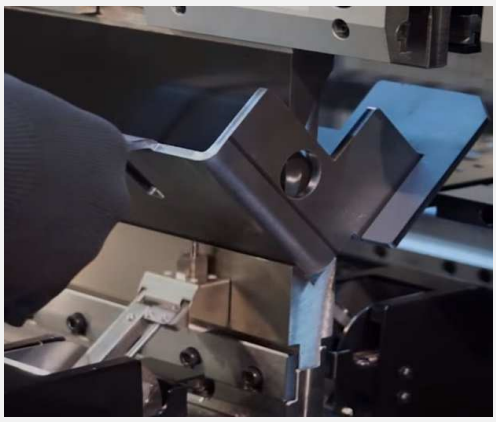

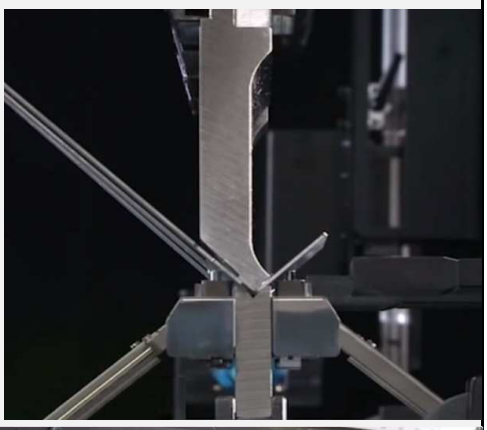

Combination of tool-sets per machine length

Machine length m	835 solid	415 solid	800 sect.	Tool-set length mm
1,2	1	1		1.250
		3		1.245
		1	1	1.215
	1		1	1.635
2	2	1		2.085
	2		1	2.470
	1	1	1	2.050
		3	1	2.045
	1	2	1	2.465
2,5	3			2.505
	2	2		2.500
	2		1	2.470
	2	1	1	2.885
	1	2	1	2.465
	1		2	2.435
	1	3	1	2.880
	1	1	2	2.850
3	3	1		2.920
	3		1	3.305
	2	3		2.915
	2	2	1	3.300
	2	1	1	2.885
	2		2	3.270
	1	5		2.910
	1	4	1	3.295
	1	2	2	3.265
		4	2	3.260
4	5			4.175
	4	2		4.170
	4	1	1	4.555
	4		1	4.140
	3	3	1	4.550
	3	2	1	4.135
	3	1	2	4.520
	3		2	4.105
	2	2	2	4.100

Worldwide sales organization, ensuring excellent availability all over the world, and guaranteeing outstanding service for the customers

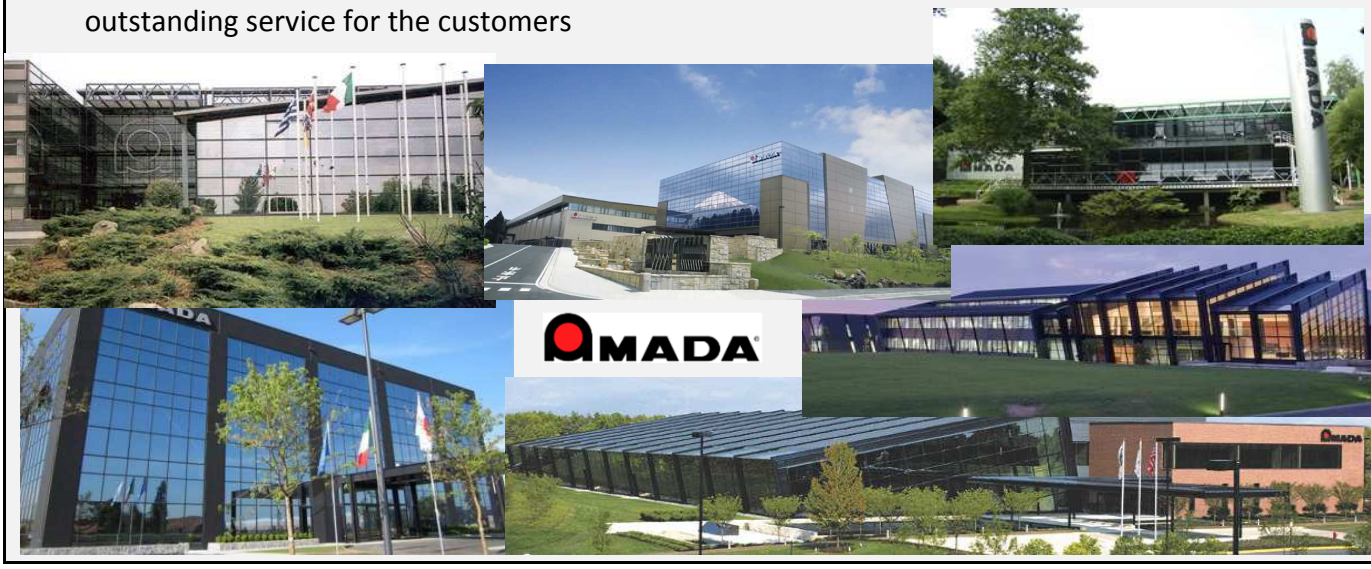

AFH Standard Punch 804 (9 mm tip)

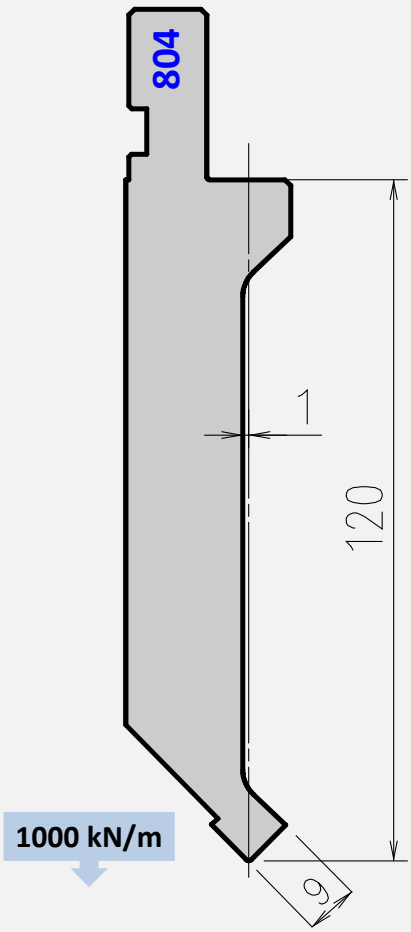

Punch 804 replaces old punches S51; S52; A04; A16

Tool angle	Tip radius	Length mm	Item No.	Weight Kg
86°	R0.6	835	ES 8048061	17,1
		415	ES 8048062	8,5
		800 Sect	ES 8048063	15,1
	R1.5	835	ES 8048151	17,1
		415	ES 8048152	8,5
		800 Sect	ES 8048153	15,1
	R3	835	ES 8048301	17,1
		415	ES 8048302	8,5
		800 Sect	ES 8048303	15,1
88°	R0.6	835	ES 8047061	17,1
		415	ES 8047062	8,5
		800 Sect	ES 8047063	15,1
90°	R0.6	835	ES 8049061	17,1
		415	ES 8049062	8,5
		800 Sect	ES 8049063	15,1

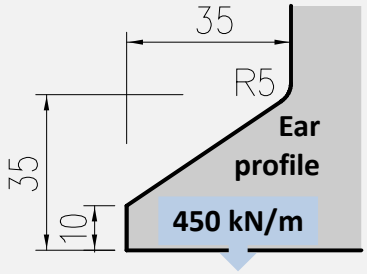

AFH Standard Punch 847 (9 mm tip)

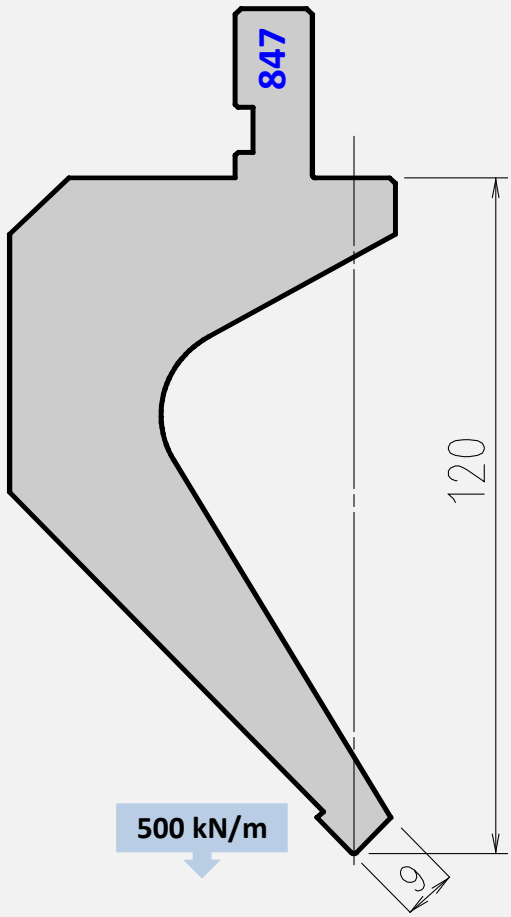

Punch 847 replaces old punches 45; 47; S55; S56; A47; A48.

Tool angle	Tip radius	Length mm	Item No.	Weight Kg
86°	R0.6	835	ES 8478061	25,2
		415	ES 8478062	12,5
		800 Sect	ES 8478063	22,2
	R1.5	835	ES 8478151	25,2
		415	ES 8478152	12,5
		800 Sect	ES 8478153	22,2
	R3	835	ES 8478301	25,2
		415	ES 8478302	12,5
		800 Sect	ES 8478303	22,2
88°	R0.6	835	ES 8477061	25,2
		415	ES 8477062	12,5
		800 Sect	ES 8477063	22,2
90°	R0.6	835	ES 8479061	25,2
		415	ES 8479062	12,5
		800 Sect	ES 8479063	22,2

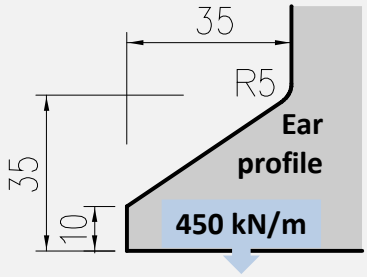

AFH Sash Punch 820 (8 mm tip)

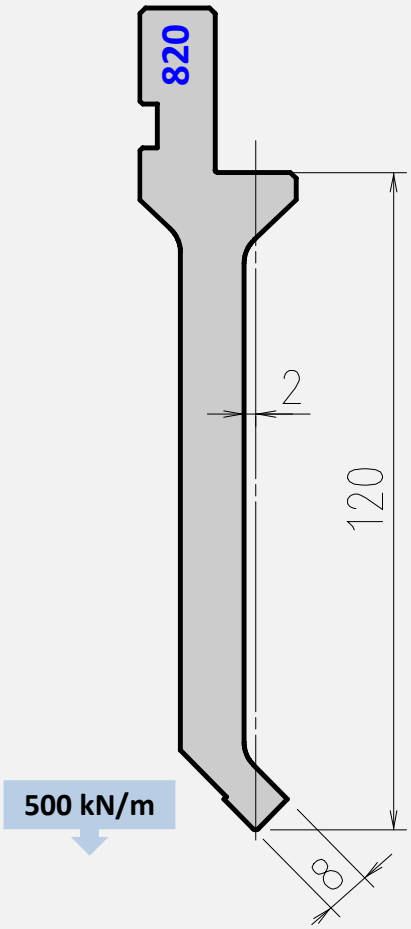

Punch 820 replaces old punches 202; A20; A21

Tool angle	Tip radius	Length mm	Item No.	Weight Kg
86°	R0.6	835	ES 8208061	11,7
		415	ES 8208062	5,8
		800 Sect	ES 8208063	10,5
	R1.5	835	ES 8208151	11,7
		415	ES 8208152	5,8
		800 Sect	ES 8208153	10,5
88°	R0.6	835	ES 8207061	11,7
		415	ES 8207062	5,8
		800 Sect	ES 8207063	10,5

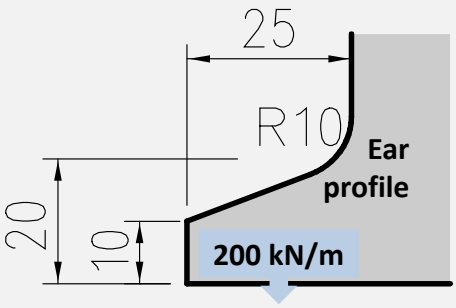

AFH Sash Punch 817 (4 mm tip)

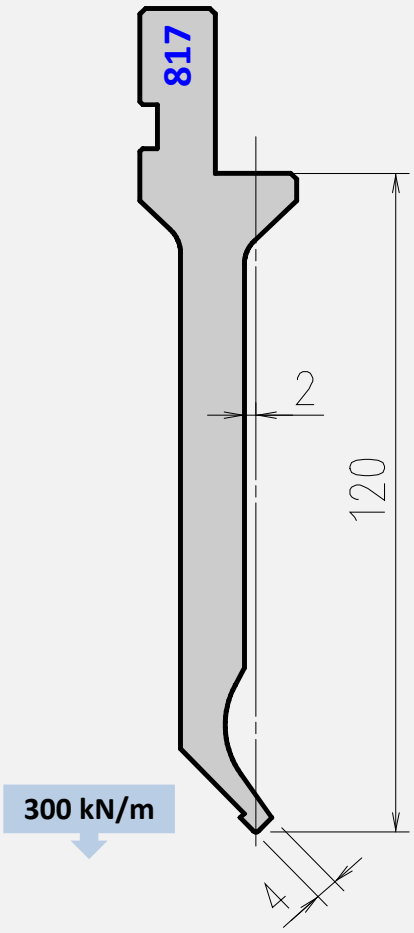

Tool angle	Tip radius	Length mm	Item No.	Weight Kg
86°	R0.6	835	ES 8178061	11,1
		415	ES 8178062	5,5
		800 Sect	ES 8178063	10,4
88°	R0.6	835	ES 8177061	11,1
		415	ES 8177062	5,5
		800 Sect	ES 8177063	10,4

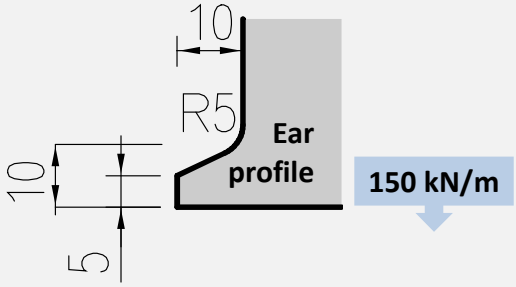

AFH Thin Gooseneck Punch 846 (6 mm tip)

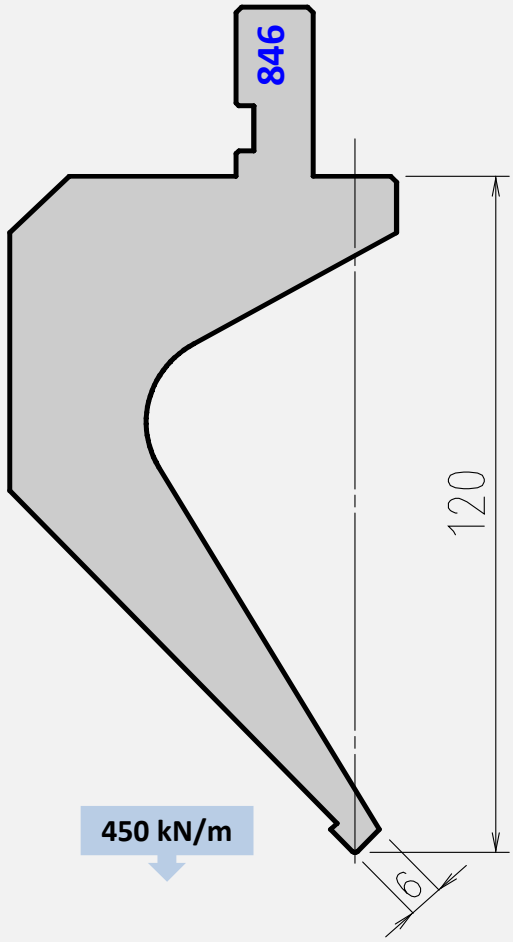

Tool angle	Tip radius	Length mm	Item No.	Weight Kg
86°	R0.6	835	ES 8468061	23,3
		415	ES 8468062	11,6
		800 Sect	ES 8468063	20,5
88°	R0.6	835	ES 8467061	23,3
		415	ES 8467062	11,6
		800 Sect	ES 8467063	20,5

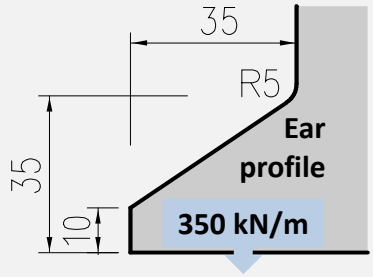

AFH Acute Sash Punch 840

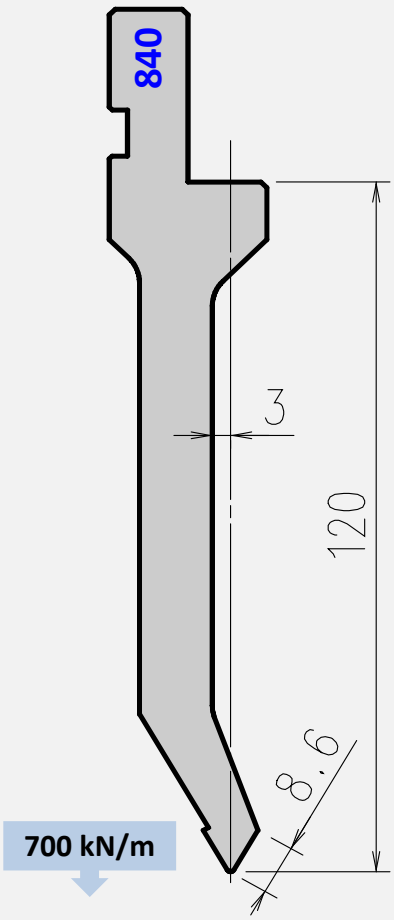

Tool angle	Tip radius	Length mm	Item No.	Weight Kg
60°	R0.6	835	ES 8406061	12,4
		415	ES 8406062	6,2
		800 Sect	ES 8406063	11,0
	R1.5	835	ES 8406151	12,4
		415	ES 8406152	6,2
		800 Sect	ES 8406153	11,0

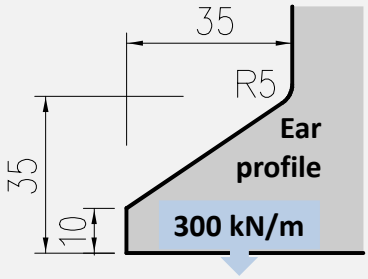

AFH Gooseneck Punch 841

Punch 841 replaces old punches 454

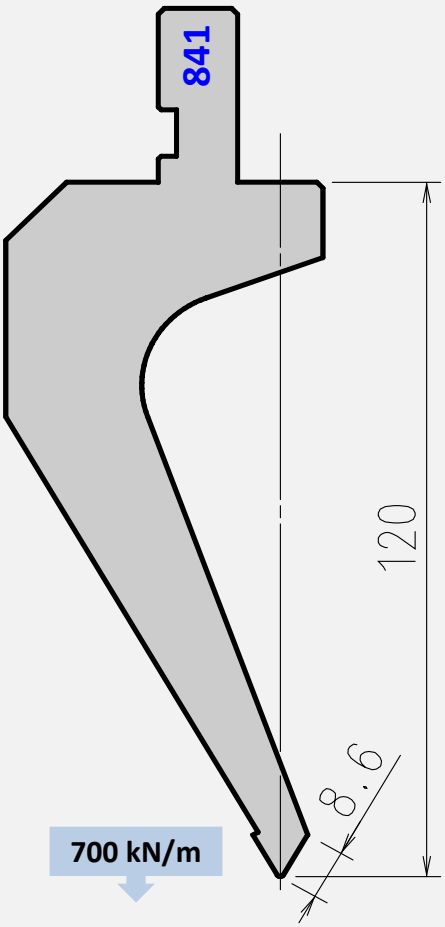

Tool angle	Tip radius	Length mm	Item No.	Weight Kg
60°	R0.6	835	ES 8416061	19,2
		415	ES 8416062	9,5
		800 Sect	ES 8416063	16,9
	R1.5	835	ES 8416151	19,2
		415	ES 8416152	9,5
		800 Sect	ES 8416153	16,9

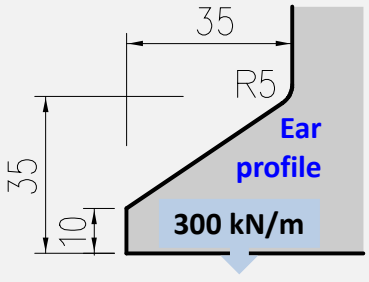

AFH Acute Angle Punch 814

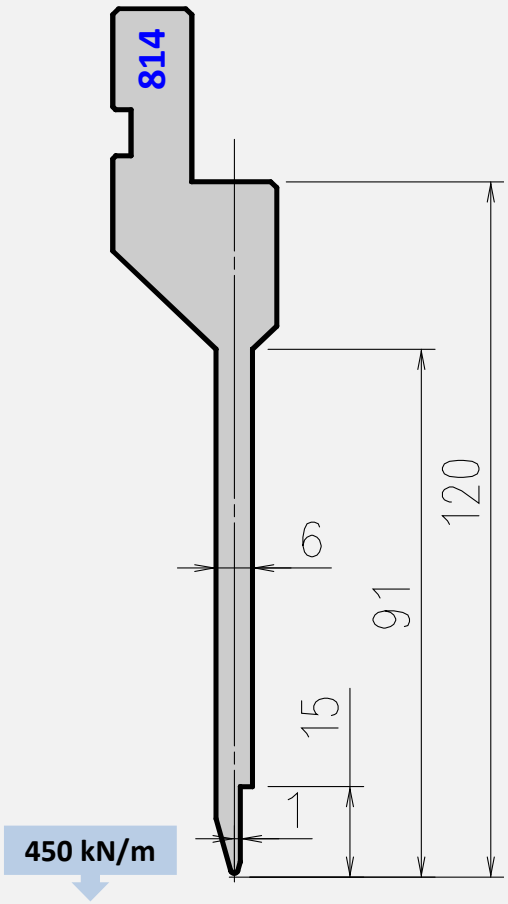

Punch 814 replaces old punches 109; S57; S58; A18; A19; A13.

Tool angle	Tip radius	Length mm	Item No.	Weight Kg
30°	R0.6	835	ES 8143061	9,8
		415	ES 8143062	4,9
		800 Sect	ES 8143063	8,8

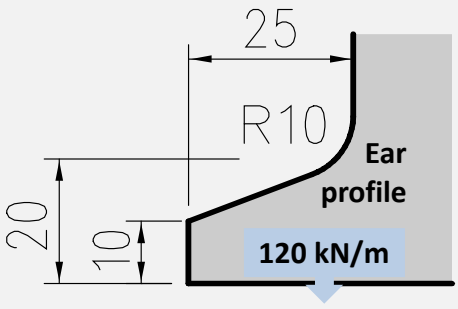

AFH Hemming Punch 831

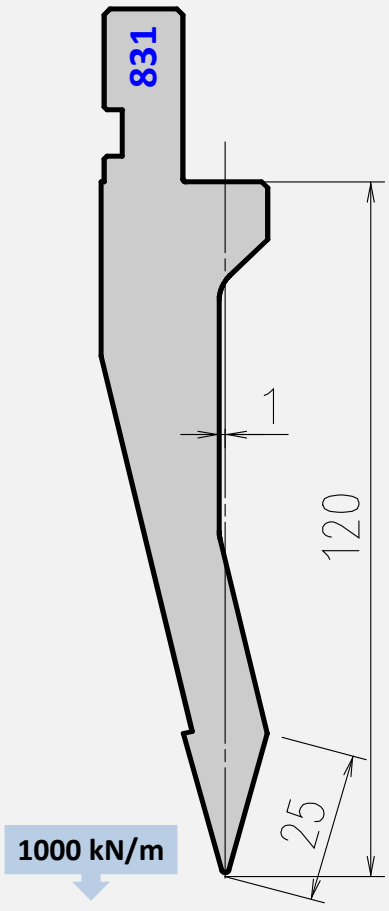

Punch 831 replaces old punches 210, Z330 and S35.

Tool angle	Tip radius	Length mm	Item No.	Weight Kg
26°	R0.6	835	ES 8312061	13,9
		415	ES 8312062	6,9
		800 Sect	ES 8312063	12,7
30°	R0.6	835	ES 8313061	14,1
		415	ES 8313062	7,0
		800 Sect	ES 8313063	12,9
	R1.5	835	ES 8313151	14,1
		415	ES 8313152	7,0
		800 Sect	ES 8313153	12,9
	R3	835	ES 8313301	13,9
		415	ES 8313302	6,9
		800 Sect	ES 8313303	12,7
	R4	835	ES 8313401	13,9
		415	ES 8313402	6,9
		800 Sect	ES 8313403	12,7

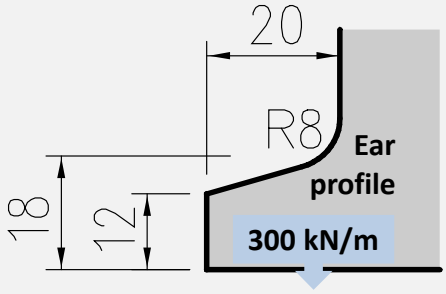

AFH Straight Punch 803

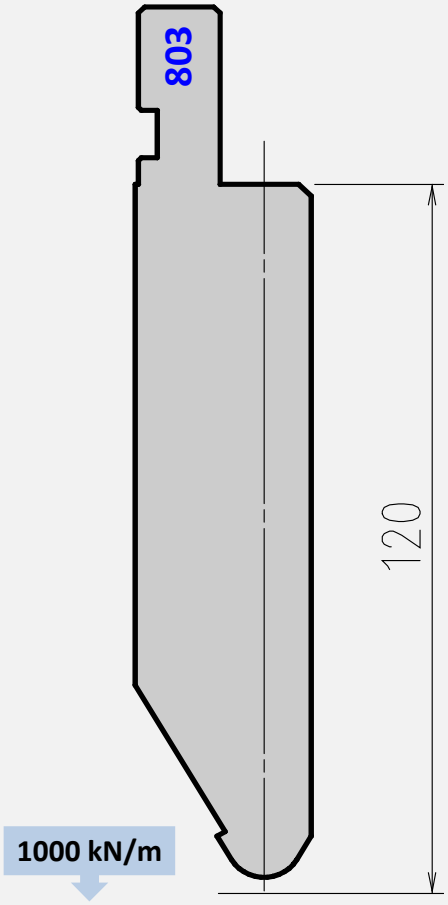

Tool angle	Tip radius	Length mm	Item No.	Weight Kg
60°	R5.0	835	ES 8036501	21,8
		415	ES 8036502	10,8
		800 Sect	ES 8036503	19,5
	R6.0	835	ES 8036601	21,8
		415	ES 8036602	10,8
		800 Sect	ES 8036603	19,5

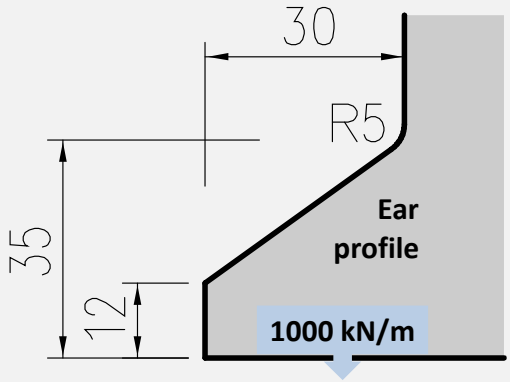

AFH Flattening Punch 822

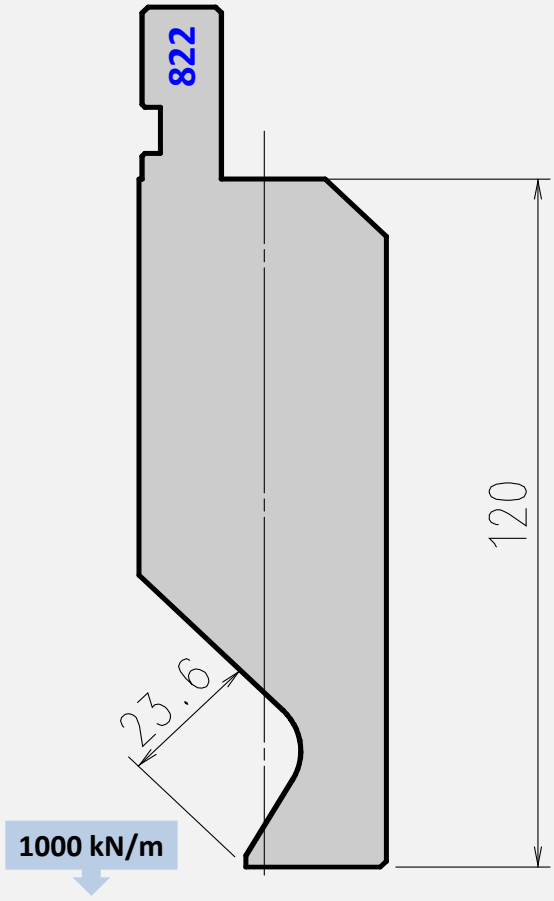

	Length mm	Item No.	Weight Kg
Flattening	835	ES 8220001	27,8
	415	ES 8220002	13,8
	800 Sect	ES 8220003	26,6

Example for staged flattening:

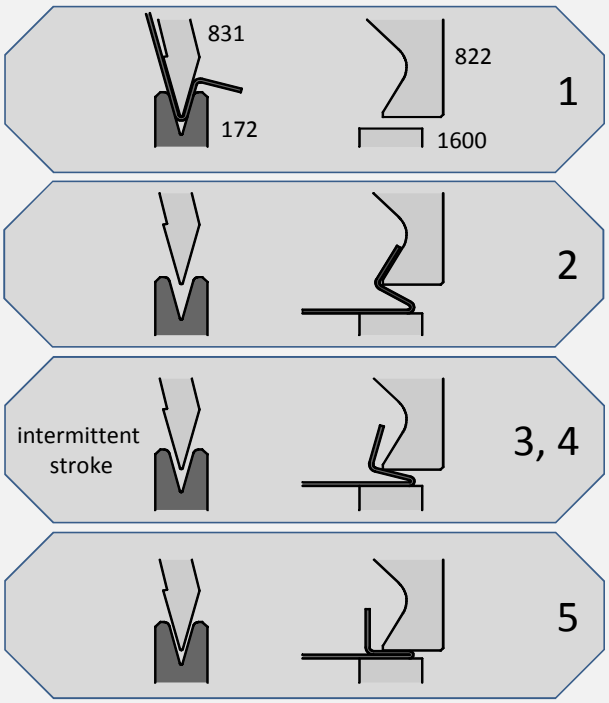

AFH Standard Punch 704 (9 mm tip)

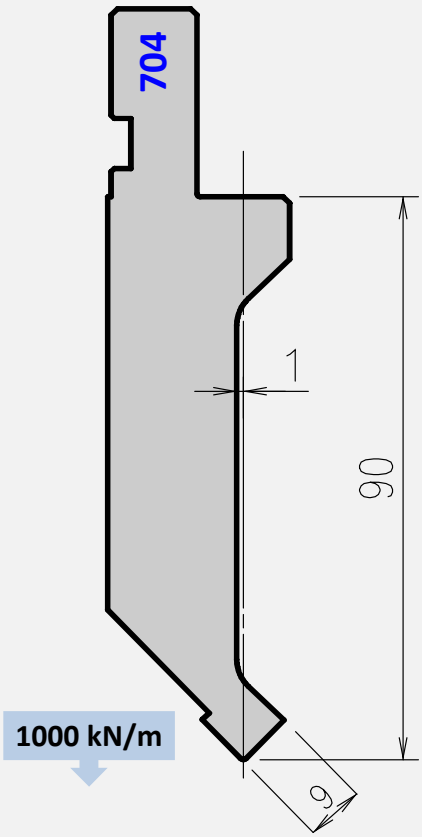

Punch 704 replaces old punches S01; S02

Tool angle	Tip radius	Length mm	Item No.	Weight Kg
86°	R0.6	835	ES 7048061	13,3
		415	ES 7048062	6,6
		800 Sect	ES 7048063	11,8
	R1.5	835	ES 7048151	13,3
		415	ES 7048152	6,6
		800 Sect	ES 7048153	11,8
	R3	835	ES 7048301	13,3
		415	ES 7048302	6,6
		800 Sect	ES 7048303	11,8
88°	R0.6	835	ES 7047061	13,3
		415	ES 7047062	6,6
		800 Sect	ES 7047063	11,8
90°	R0.6	835	ES 7049061	13,3
		415	ES 7049062	6,6
		800 Sect	ES 7049063	11,8

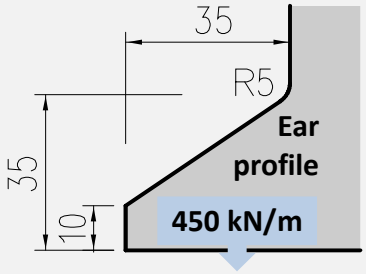

AFH Standard Punch 747 (9 mm tip)

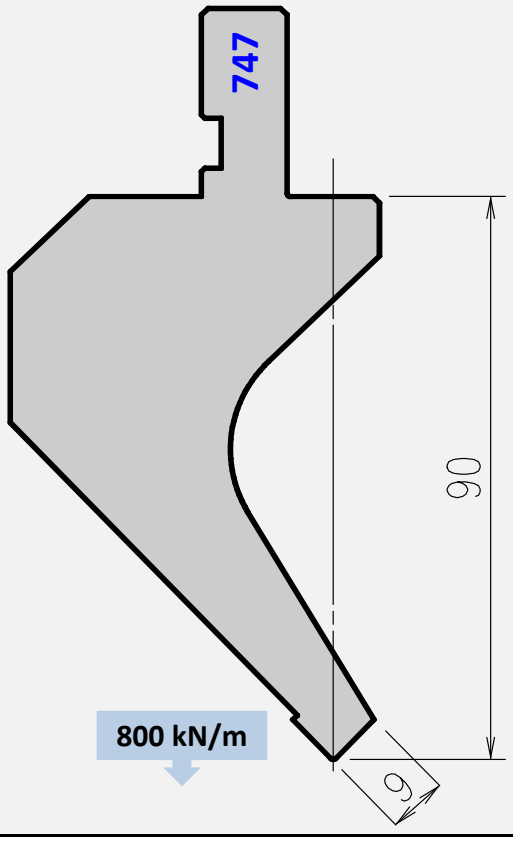

Punch 747 replaces old punch 452

Tool angle	Tip radius	Length mm	Item No.	Weight Kg
86°	R0.6	835	ES 7478061	19,4
		415	ES 7478062	9,6
		800 Sect	ES 7478063	17,1
	R1.5	835	ES 7478151	19,4
		415	ES 7478152	9,6
		800 Sect	ES 7478153	17,1
	R3	835	ES 7478301	19,4
		415	ES 7478302	9,6
		800 Sect	ES 7478303	17,1
88°	R0.6	835	ES 7477061	19,4
		415	ES 7477062	9,6
		800 Sect	ES 7477063	17,1
90°	R0.6	835	ES 7479061	19,4
		415	ES 7479062	9,6
		800 Sect	ES 7479063	17,1

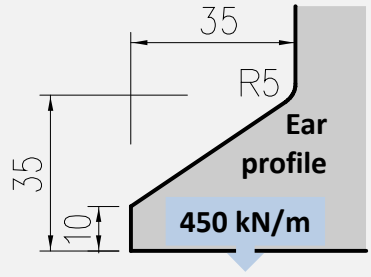

AFH Sash Punch 720 (8 mm tip)

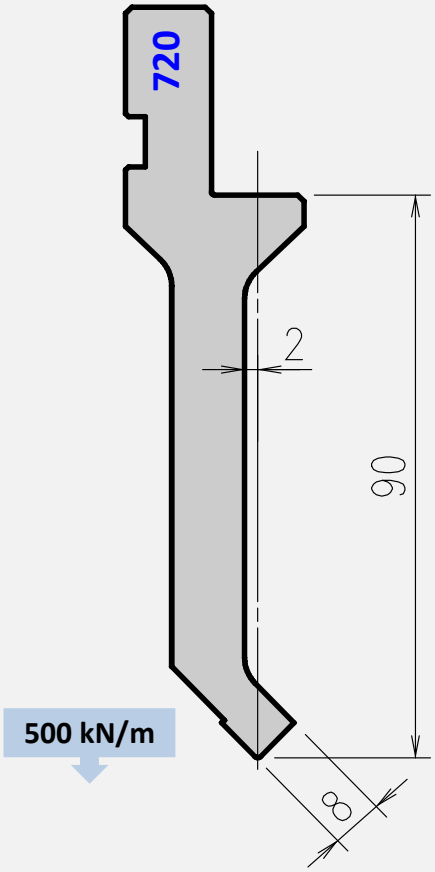

Punch 720 replaces old punches S03; S04

Tool angle	Tip radius	Length mm	Item No.	Weight Kg
86°	R0.6	835	ES 7208061	9,1
		415	ES 7208062	4,5
		800 Sect	ES 7208063	8,2
	R1.5	835	ES 7208151	9,1
		415	ES 7208152	4,5
		800 Sect	ES 7208153	8,2
88°	R0.6	835	ES 7207061	9,1
		415	ES 7207062	4,5
		800 Sect	ES 7207063	8,2

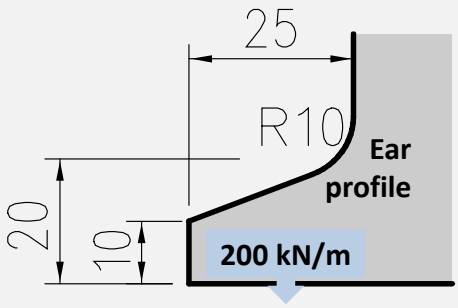

AFH Thin Gooseneck Punch 746 (6 mm tip)

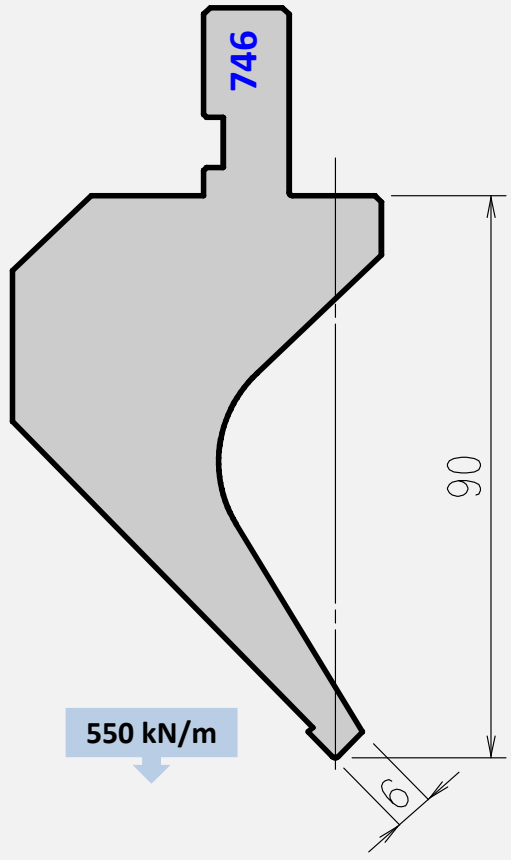

Punch 746 replaces old punches 453; S05; S06

Tool angle	Tip radius	Length mm	Item No.	Weight Kg
86°	R0.6	835	ES 7468061	18,3
		415	ES 7468062	9,1
		800 Sect	ES 7468063	16,1
88°	R0.6	835	ES 7467061	18,3
		415	ES 7467062	9,1
		800 Sect	ES 7467063	16,1

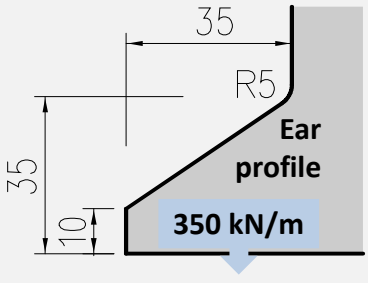

AFH Thin Standard Punch 717 (4 mm tip)

Punch 717 replaces old punches Z2883; 670

Tool angle	Tip radius	Length mm	Item No.	Weight Kg
86°	R0.6	835	ES 7178061	11,8
		415	ES 7178062	5,8
		800 Sect	ES 7178063	11,0
88°	R0.6	835	ES 7177061	11,8
		415	ES 7177062	5,8
		800 Sect	ES 7177063	11,0

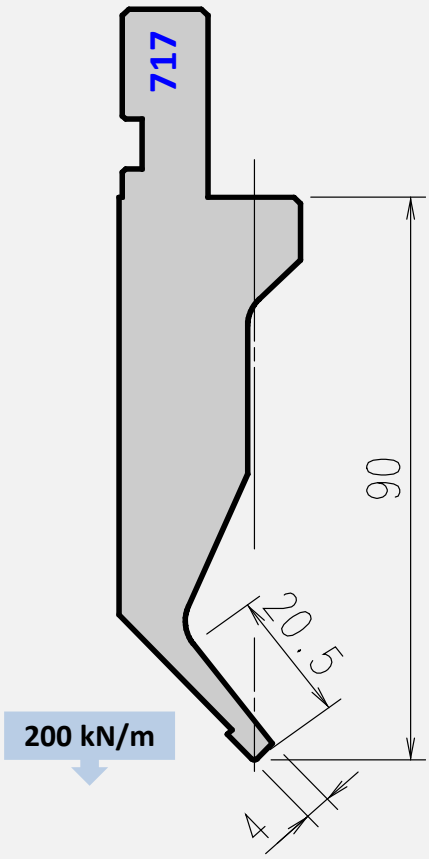

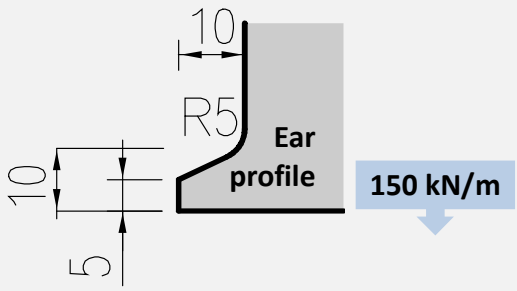

AFH Acute Angle Punch 713

Punch 713 replaces old punches S07; S08; S31

Tool angle	Tip radius	Length mm	Item No.	Weight Kg
30°	R0.6	835	ES 7133061	8,7
		415	ES 7133062	4,3
		800 Sect	ES 7133063	7,9

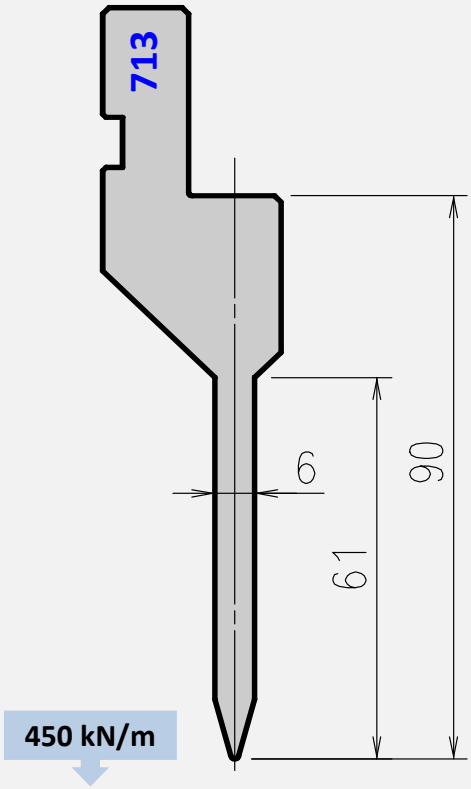

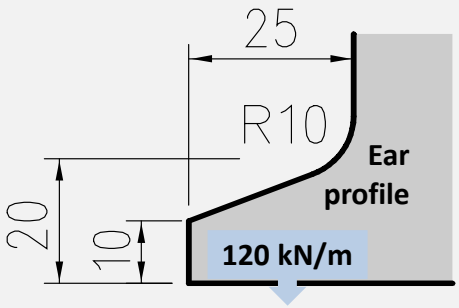

AFH Hemming Punch 731

Punch 731 replaces old punches 211; S30

Tool angle	Tip radius	Length mm	Item No.	Weight Kg
30°	R0.6	835	ES 7313061	10,1
		415	ES 7313062	5,0
		800 Sect	ES 7313063	9,2
	R1.5	835	ES 7313151	10,1
		415	ES 7313152	5,0
		800 Sect	ES 7313153	9,2
	R3	835	ES 7313301	10,1
		415	ES 7313302	5,0
		800 Sect	ES 7313303	9,2

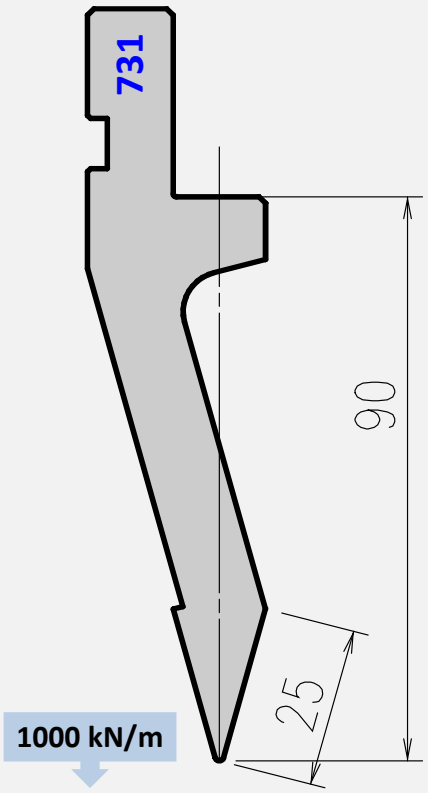

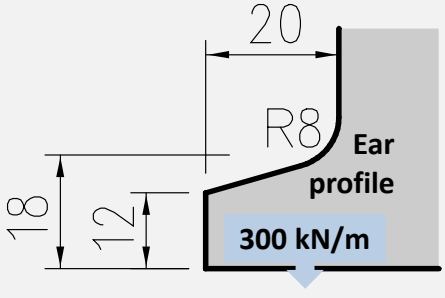

AFH Std. Punch 904

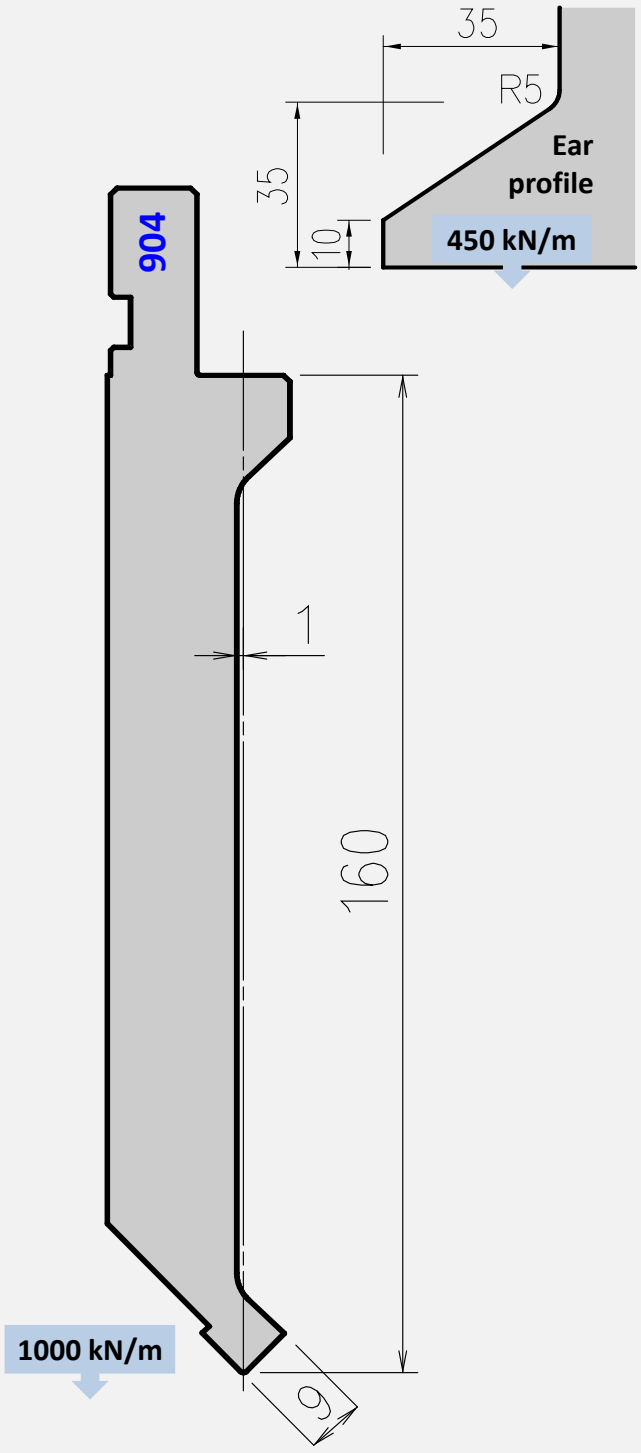

Tool angle	Tip radius	Length mm	Item No.	Wt. Kg
86°	R0.6	835	ES 9048061	22,1
		415	ES 9048062	11,0
		800 Sect	ES 9048063	19,5
	R1.5	835	ES 9048151	22,1
		415	ES 9048152	11,0
		800 Sect	ES 9048153	19,5
	R3	835	ES 9048301	22,1
		415	ES 9048302	11,0
		800 Sect	ES 9048303	19,5
88°	R0.6	835	ES 9047061	22,1
		415	ES 9047062	11,0
		800 Sect	ES 9047063	19,5

AFH Acute Angle Punch 914

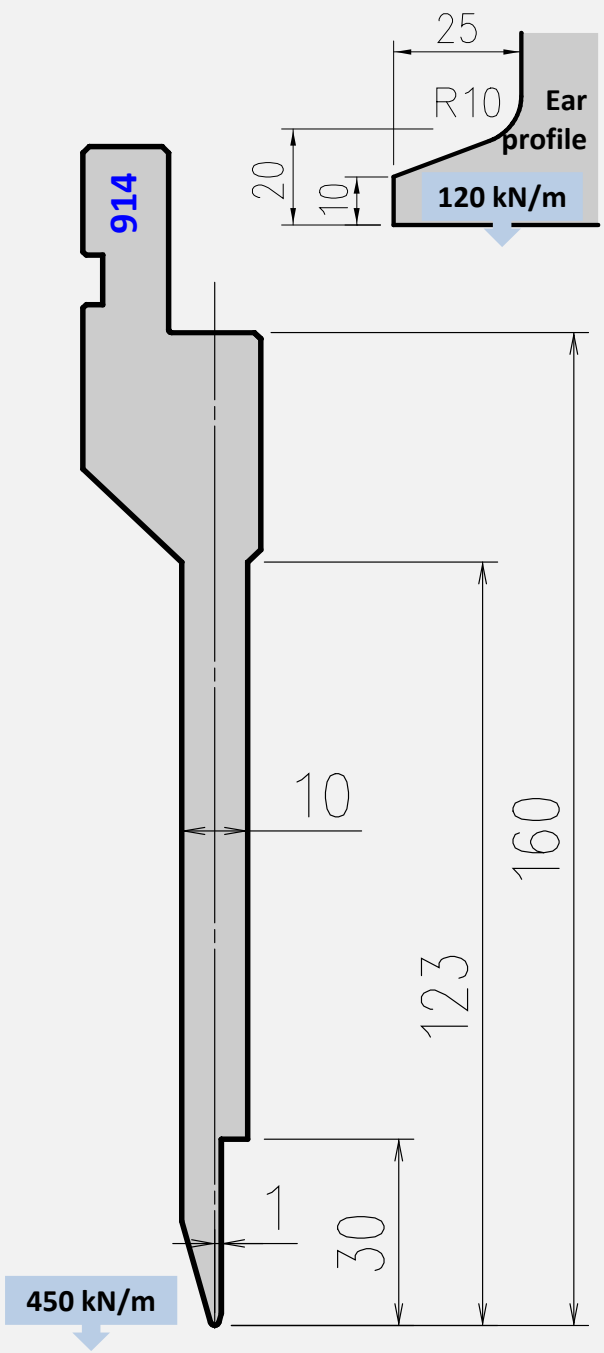

Punch 914 replaces old punches 110; 113

Tool angle	Tip radius	Length mm	Item No.	Wt. Kg
30°	R0.6	835	ES 9143061	15,1
		415	ES 9143062	7,5
		800 Sect	ES 9143063	13,6

AFH Standard Punch 947

Punch 947 replaces old punch 472

Tool angle	Tip radius	Length mm	Item No.	Weight Kg
86°	R0.6	835	ES 9478061	39,1
		415	ES 9478062	19,4
		800 Sect	ES 9478063	34,3
	R1.5	835	ES 9478151	39,1
		415	ES 9478152	19,4
		800 Sect	ES 9478153	34,3
	R3	835	ES 9478301	39,1
		415	ES 9478302	19,4
		800 Sect	ES 9478303	34,3
88°	R0.6	835	ES 9477061	39,1
		415	ES 9477062	19,4
		800 Sect	ES 9477063	34,3

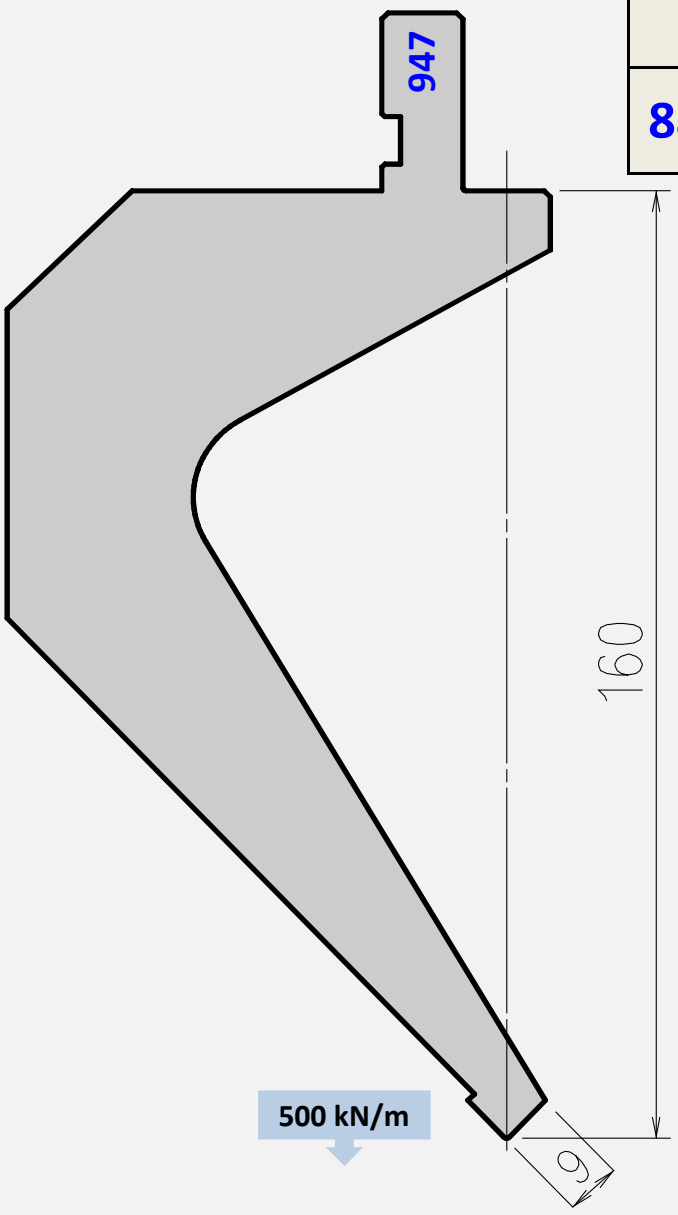

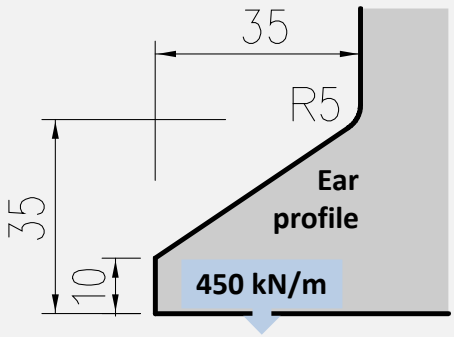

Standard Punch 604 (9 mm tip)

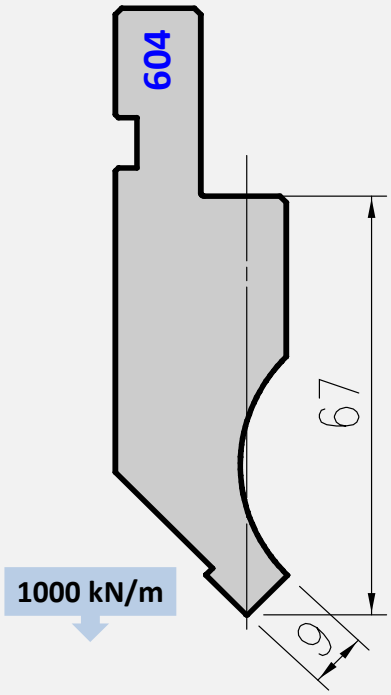

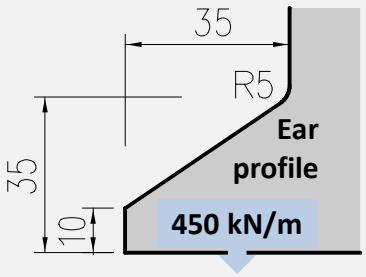

Punch 604 replaces old punch 4

Tool angle	Tip radius	Length mm	Item No.	Weight Kg
88°	R0.2	835	ES 6047021	11,0
		415	ES 6047022	5,5
		800 Sect	ES 6047023	9,7
	R0.6	835	ES 6047061	11,0
		415	ES 6047062	5,5
		800 Sect	ES 6047063	9,7
	R0.8	835	ES 6047081	11,0
		415	ES 6047082	5,5
		800 Sect	ES 6047083	9,7
	R1.5	835	ES 6047151	11,0
		415	ES 6047152	5,5
		800 Sect	ES 6047153	9,7
	R3	835	ES 6047301	11,0
		415	ES 6047302	5,5
		800 Sect	ES 6047303	9,7
90°	R0.2	835	ES 6049021	11,0
		415	ES 6049022	5,5
		800 Sect	ES 6049023	9,7
	R0.6	835	ES 6049061	11,0
		415	ES 6049062	5,5
		800 Sect	ES 6049063	9,7

Standard Punch 617 (4 mm tip)

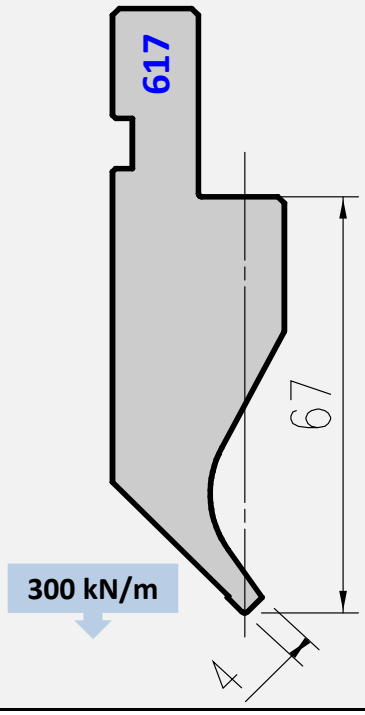

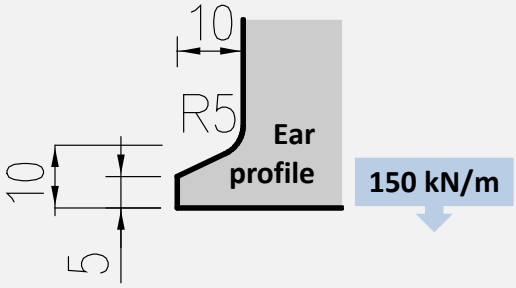

Punch 617 replaces old punch 117

Tool angle	Tip radius	Length mm	Item No.	Weight Kg
88°	R0.2	835	ES 6177021	10,2
		415	ES 6177022	5,1
		800 Sect	ES 6177023	9,5
	R0.6	835	ES 6177061	10,2
		415	ES 6177062	5,1
		800 Sect	ES 6177063	9,5
	R0.8	835	ES 6177081	10,2
		415	ES 6177082	5,1
		800 Sect	ES 6177083	9,5
90°	R0.2	835	ES 6179021	10,2
		415	ES 6179022	5,1
		800 Sect	ES 6179023	9,5
	R0.6	835	ES 6179061	10,2
		415	ES 6179062	5,1
		800 Sect	ES 6179063	9,5

Straight Punch 603

Punch 603 replaces old punch 3

Tool angle	Tip radius	Length mm	Item No.	Weight Kg
60°	R6.0	835	ES 6036601	12,1
		415	ES 6036602	6,0
		800 Sect	ES 6036603	10,9

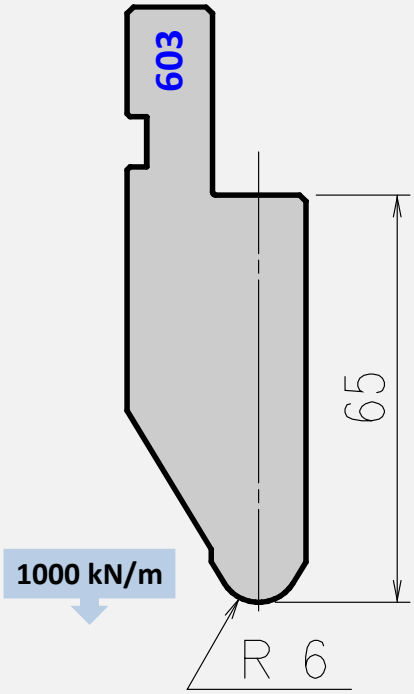

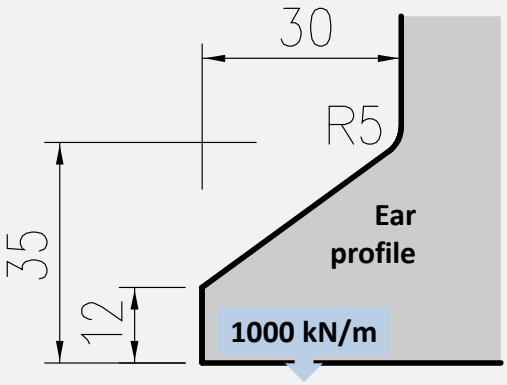

Acute Sash Punch 640

Punch 640 replaces old punch 704

Tool angle	Tip radius	Length mm	Item No.	Weight Kg
60°	R0.8	835	ES 6406081	8,3
		415	ES 6406082	4,1
		800 Sect	ES 6406083	7,6
	R2.0	835	ES 6406201	8,3
		415	ES 6406202	4,1
		800 Sect	ES 6406203	7,6

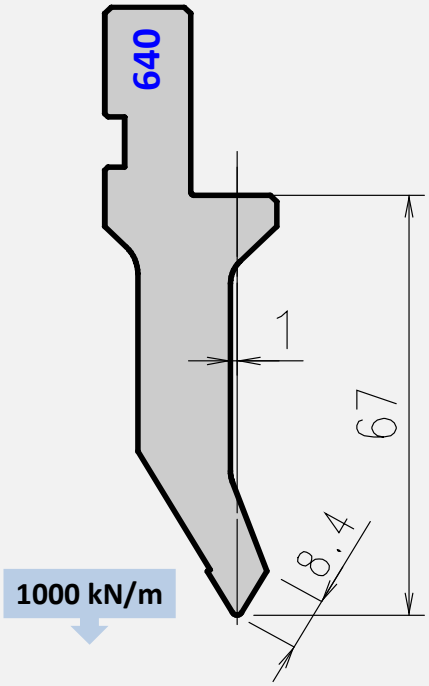

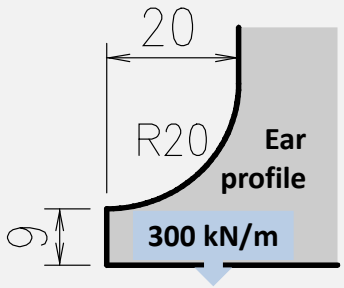

Straight Punch 631

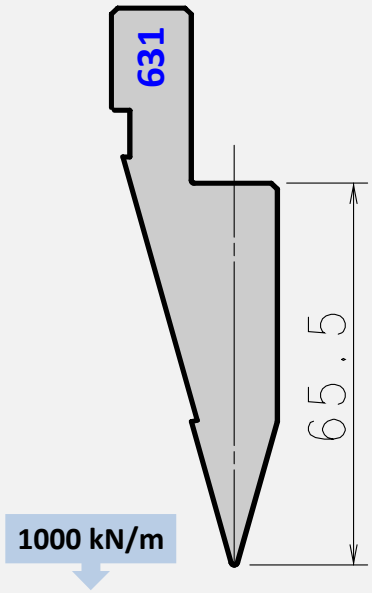

Punch 631 replaces old punch es 103 and 8

Tool angle	Tip radius	Length mm	Item No.	Weight Kg
30°	R0.52	835	ES 6313051	8,4
		415	ES 6313052	4,2
		800 Sect	ES 6313053	7,7

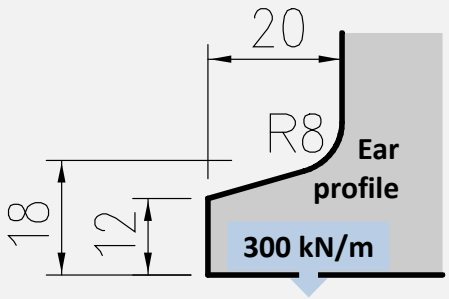

Flattening Punch 622

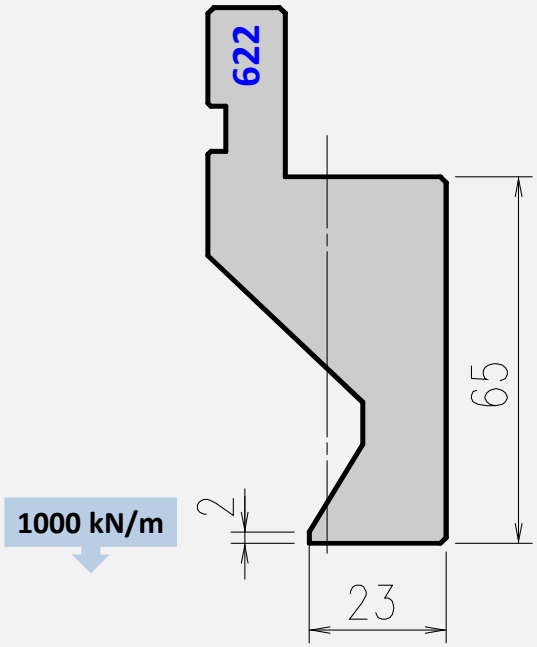

No ears

Punch 622 replaces old punch 220

	Length mm	Item No.	Weight Kg
Flattening	835	ES 6220001	13,5
	415	ES 6220002	6,7

Flattening Punch 020

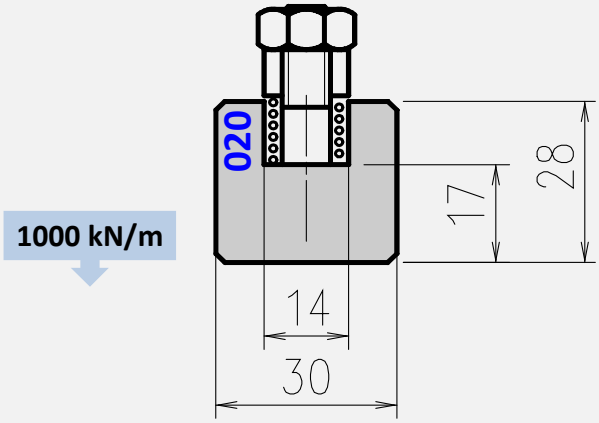

No ears

Punch 020 replaces old punch 20

	Length mm	Item No.	Weight Kg
Flattening	835	ES 0200001	4,5
	415	ES 0200002	2,2

All mounting hardware included.

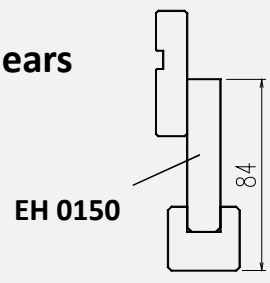

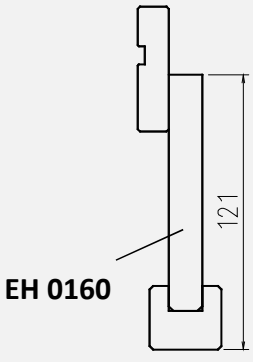

R7 Insert

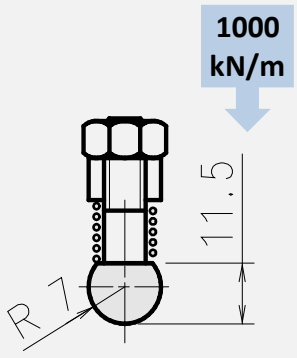

Insert 017007 replaces
old insert 01707

L mm	Item No.	Weight Kg
835	ES 0170071	1,0
415	ES 0170072	0,6

R8 Insert

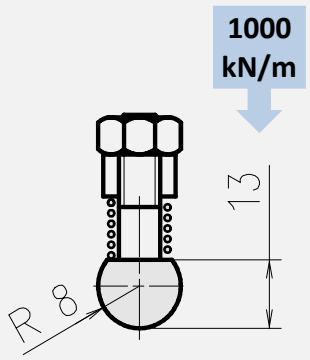

Insert 017008 replaces
old insert 01708

L mm	Item No.	Weight Kg
835	ES 0170081	1,5
415	ES 0170082	0,8

R9 Insert

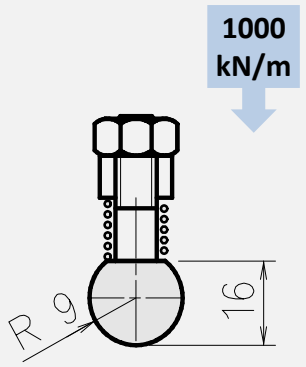

Insert 017009 replaces
old insert 01709

L mm	Item No.	Weight Kg
835	ES 0170091	1,9
415	ES 0170092	0,9

R10 Insert

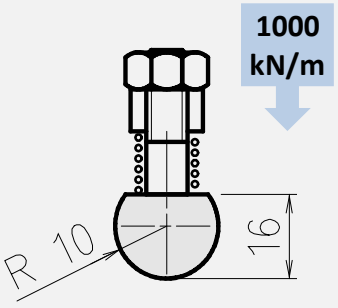

Insert 017010 replaces
old insert 01710

L mm	Item No.	Weight Kg
835	ES 0170101	2,1
415	ES 0170102	1,1

R11 Insert

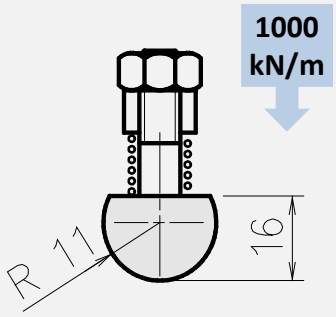

Insert 017011 replaces
old insert 01711

L mm	Item No.	Weight Kg
835	ES 0170111	2,3
415	ES 0170112	1,2

R12,5 Insert

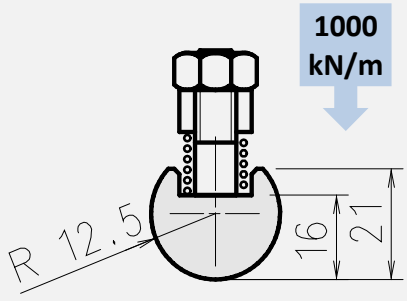

Insert 017012 replaces
old insert 01712

L mm	Item No.	Weight Kg
835	ES 0170121	2,7
415	ES 0170122	1,4

R14 Insert

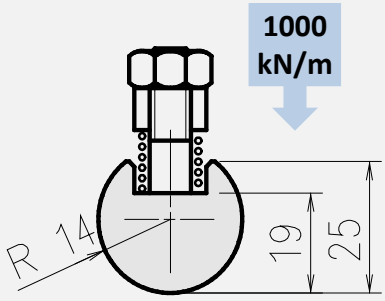

Insert 017014 replaces
old insert 01714

L mm	Item No.	Weight Kg
835	ES 0170141	3,6
415	ES 0170142	1,8

R15 Insert

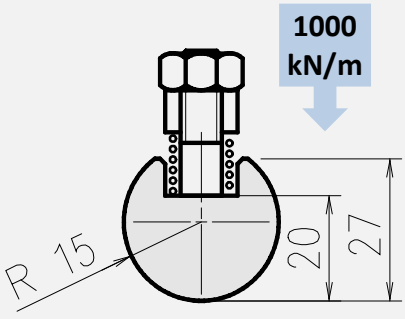

Insert 017015 replaces
old insert 01715

L mm	Item No.	Weight Kg
835	ES 0170151	4,1
415	ES 0170152	2,0

R16 Insert

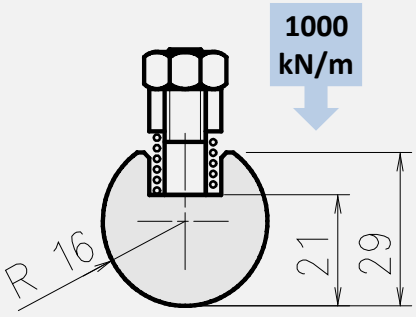

Insert 017016 replaces
old insert 01716

L mm	Item No.	Weight Kg
835	ES 0170161	4,6
415	ES 0170162	2,3

Note: Use Radius Inserts with Punch Holder EH 0150 or EH 0160. Mounting hardware is included.

R17,5 Insert

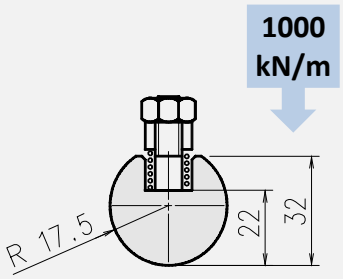

Insert 017017 replaces old insert 01717

L mm	Item No.	Weight Kg
835	ES 0170171	5,2
415	ES 0170172	2,8

R20 Insert

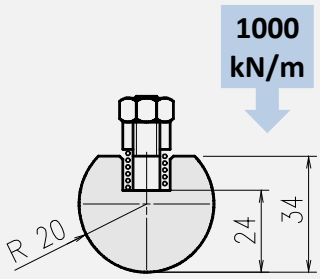

Insert 017020 replaces old insert 01720

L mm	Item No.	Weight Kg
835	ES 0170201	6,8
415	ES 0170202	3,4

R22,5 Insert

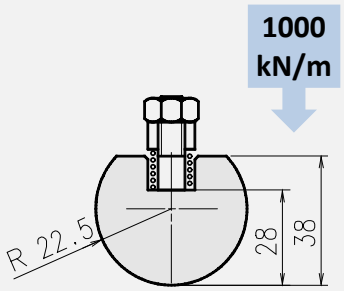

Insert 017022 replaces old insert 01722

L mm	Item No.	Weight Kg
835	ES 0170221	8,8
415	ES 0170222	4,4

R25 Insert

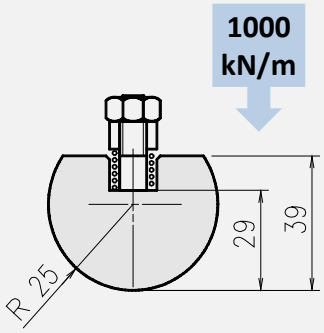

Insert 017025 replaces old insert 01725

L mm	Item No.	Weight Kg
835	ES 0170251	10,2
415	ES 0170252	5,1

R30 Insert

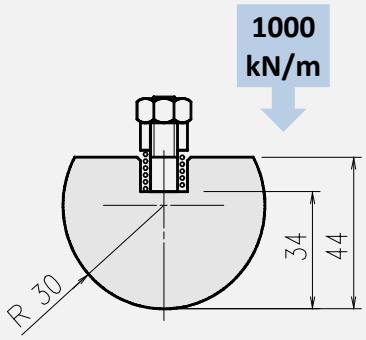

Insert 017030 replaces old insert 01730

L mm	Item No.	Weight Kg
835	ES 0170301	14,0
415	ES 0170302	7,0

R35 Insert

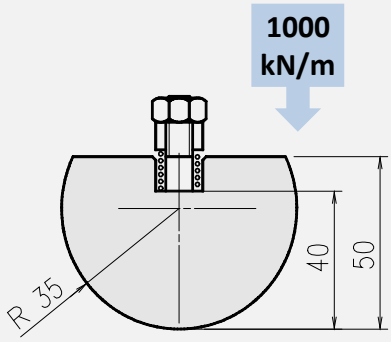

Insert 017035 replaces old insert 01735

L mm	Item No.	Weight Kg
835	ES 0170351	18,9
415	ES 0170352	14,2

R40 Insert

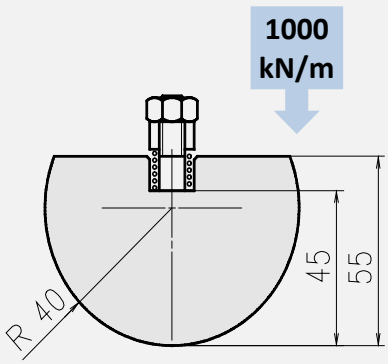

Insert 017040 replaces old insert 01740

L mm	Item No.	Weight Kg
835	ES 0170401	23,7
415	ES 0170402	11,7

R45 Insert

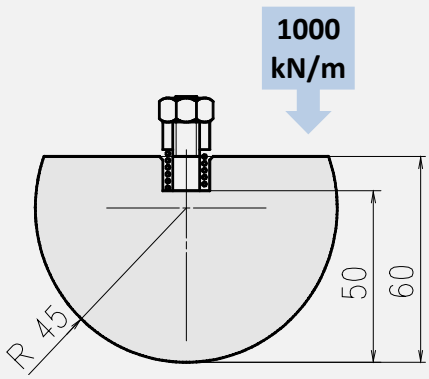

Insert 017045 replaces old insert 01745

L mm	Item No.	Weight Kg
835	ES 0170451	29,1
415	ES 0170452	14,5

R50 Insert

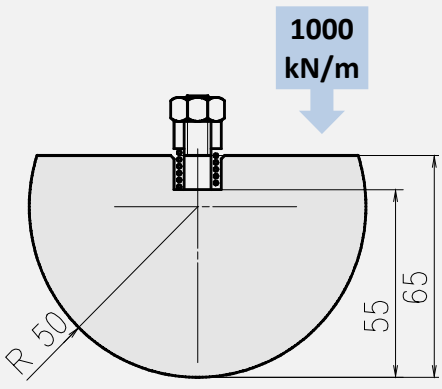

Insert 017050 replaces old insert 01750

L mm	Item No.	Weight Kg
835	ES 0170501	35,0
415	ES 0170502	17,5

Note: Use Radius Inserts with Punch Holder EH 0150 or EH 0160. Mounting hardware is included.

Punch Holder : 91

Sect. 835mm = 2x100ear
20; 25; 30
35; 40; 50
70; 165; 200

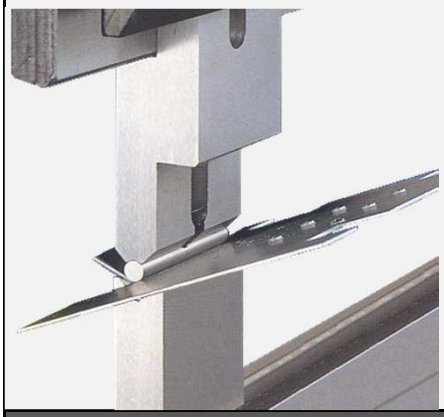

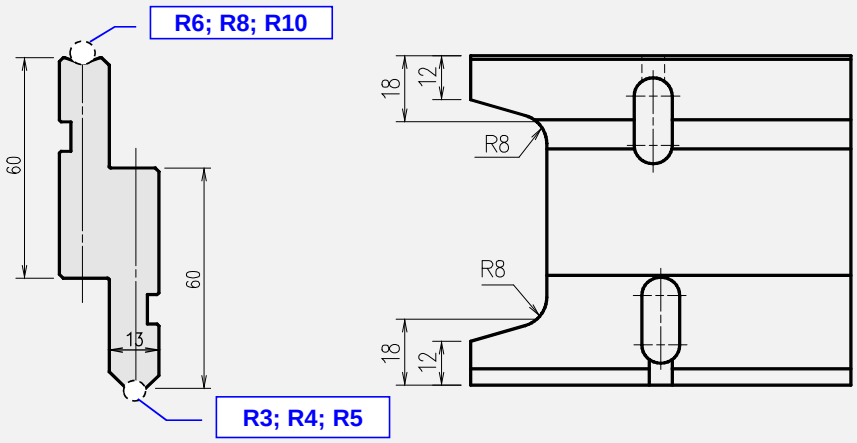

Tonnage:
- 1000 kN/m for 835 and 415 tools
- 150 kN/m for Sect. tools

L mm	Item No.	Weight Kg
835	DX 091001	10,0
415	DX 091002	5,0
Sect.	DX 091801	10,0

R3 Insert

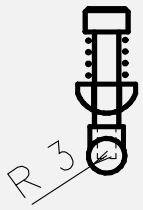

L mm	Item No.	Weight Kg
835	DX 090301	0,2
415	DX 090302	0,1
Sect.	DX 090831	0,2

R4 Insert

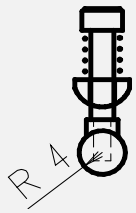

L mm	Item No.	Weight Kg
835	DX 090401	0,3
415	DX 090402	0,1
Sect.	DX 090841	0,3

R5 Insert

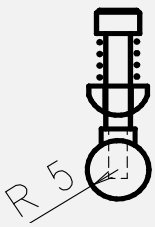

L mm	Item No.	Weight Kg
835	DX 090501	0,5
415	DX 090502	0,2
Sect.	DX 090851	0,5

R6 Insert

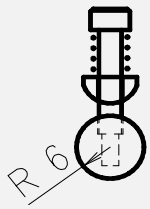

L mm	Item No.	Weight Kg
835	DX 090601	0,7
415	DX 090602	0,3
Sect.	DX 090861	0,7

R8 Insert

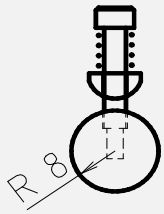

L mm	Item No.	Weight Kg
835	DX 090801	1,3
415	DX 090802	0,6
Sect.	DX 090881	1,3

R10 Insert

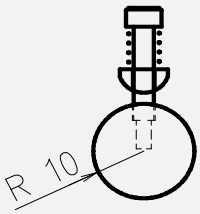

L mm	Item No.	Weight Kg
835	DX 090101	2,1
415	DX 090102	1,0
Sect.	DX 090811	2,1

Colour-Multi-Radius

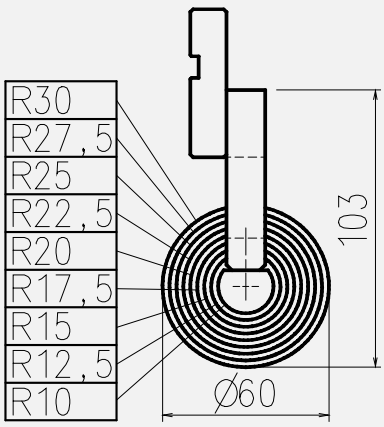

Sect. 835mm =
25; 40; 50
100; 120
200; 300

500 kN/m

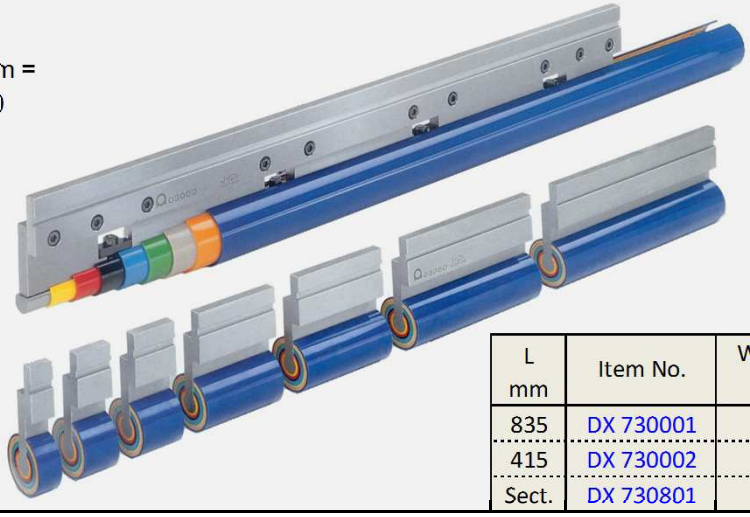

L mm	Item No.	Weight Kg
835	DX 730001	13,0
415	DX 730002	6,4
Sect.	DX 730801	13,0

AFH Standard Die 0703 (V 6)

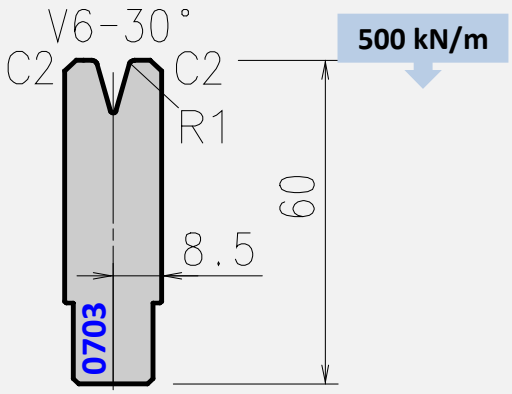

Die 0703 replaces old dies 14006 and A7003

Tool angle	Length mm	Item No.	Weight Kg
30°	835	ED 0703101	6,0
	415	ED 0703102	3,0
	800 sect.	ED 0703103	5,7

Staged* Die 1703 (V 6)

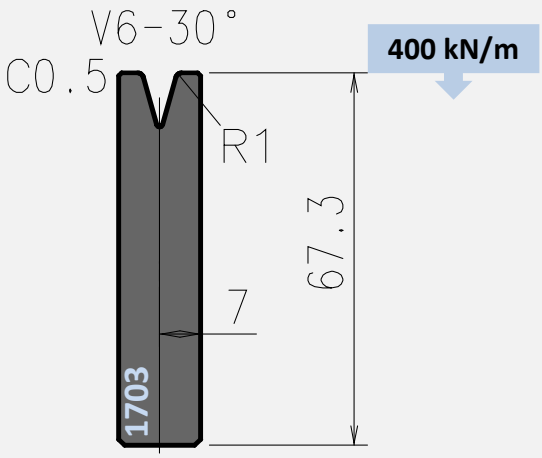

Die 1703 replaces old die S7030

Tool angle	Length mm	Item No.	Weight Kg
30° staged	835	ED 1703101	5,9
	415	ED 1703102	3,0
	800 sect.	ED 1703103	5,7

AFH Standard Die 0713 (V 8)

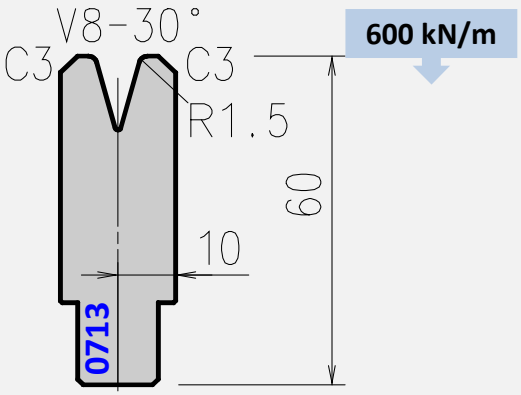

Die 0713 replaces old dies 14100 and A7103

Tool angle	Length mm	Item No.	Weight Kg
30°	835	ED 0713151	6,8
	415	ED 0713152	3,4
	800 sect.	ED 0713153	6,5

Staged* Die 1713 (V 8)

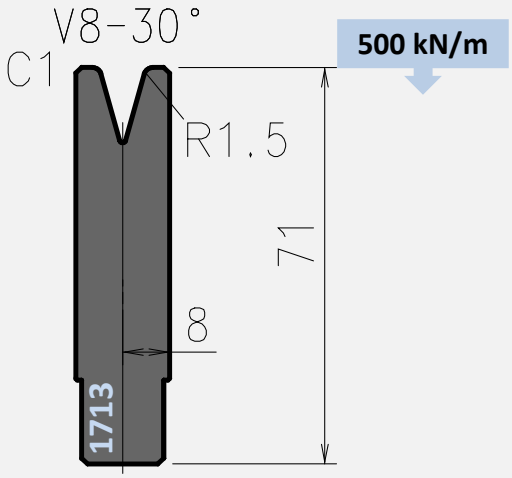

Die 1713 replaces old die S7130

Tool angle	Length mm	Item No.	Weight Kg
30° staged	835	ED 1713151	6,8
	415	ED 1713152	3,4
	800 sect.	ED 1713153	6,5

AFH Standard Die 0723 (V 10)

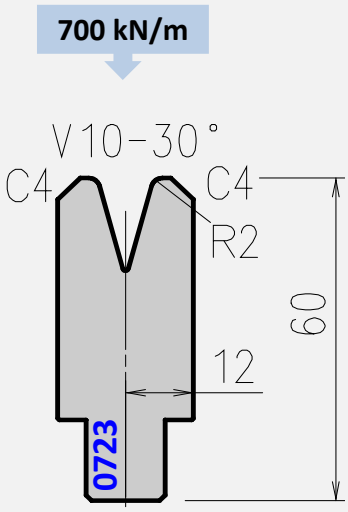

Die 0723 replaces old dies 14106 and A7203

Tool angle	Length mm	Item No.	Weight Kg
30°	835	ED 0723201	7,7
	415	ED 0723202	3,8
	800 sect.	ED 0723203	7,4

Staged* Die 1723 (V 10)

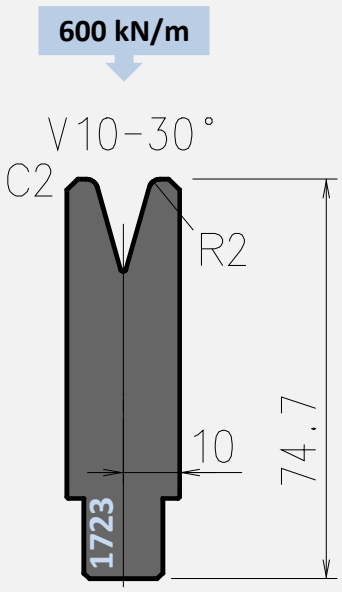

Die 1723 replaces old die S7230

Tool angle	Length mm	Item No.	Weight Kg
30° staged	835	ED 1723201	8,3
	415	ED 1723202	4,2
	800 sect.	ED 1723203	8,0

AFH Standard Die 0743 (V 12)

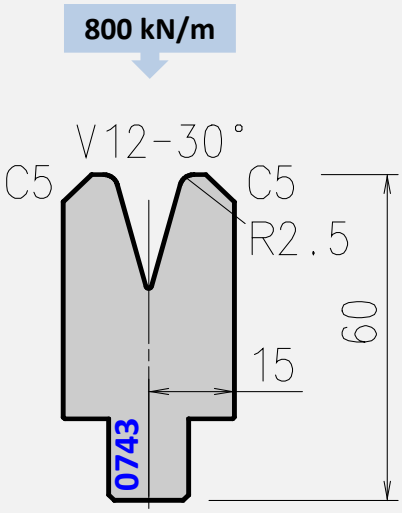

Die 0743 replaces old dies 14200 and A7403

Tool angle	Length mm	Item No.	Weight Kg
30°	835	ED 0743251	9,1
	415	ED 0743252	4,5
	800 sect.	ED 0743253	8,7

Staged* Die 1743 (V 12)

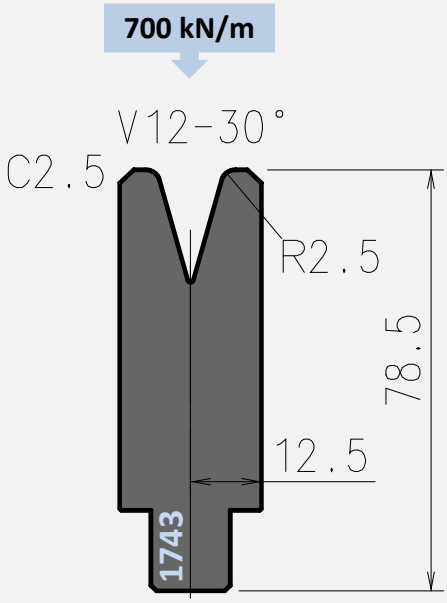

Die 1713 replaces old die S7430

Tool angle	Length mm	Item No.	Weight Kg
30° staged	835	ED 1743251	10,5
	415	ED 1743252	5,2
	800 sect.	ED 1743253	10,0

AFH Standard Die 0773 (V 16)

600 kN/m

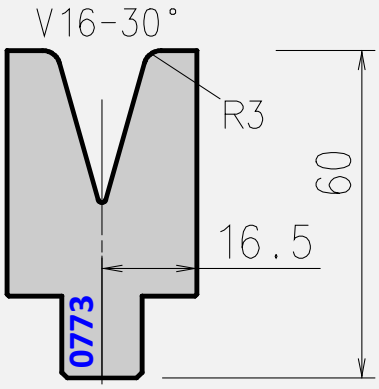

Die 0773 replaces old die 14206

Tool angle	Length mm	Item No.	Weight Kg
30°	835	ED 0773301	9,7
	415	ED 0773302	4,8
	800 sect.	ED 0773303	9,3

Standard Die 0793 (V 20)

600 kN/m

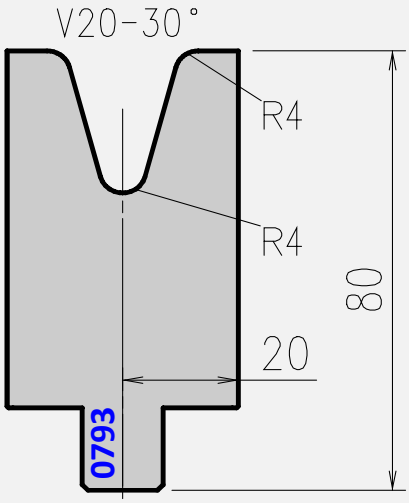

Die 0793 replaces old die 14300

Tool angle	Length mm	Item No.	Weight Kg
30°	835	ED 0793401	16,4
	415	ED 0793402	8,2
	800 sect.	ED 0793403	15,7

Standard Die 0823 (V 25)

600 kN/m

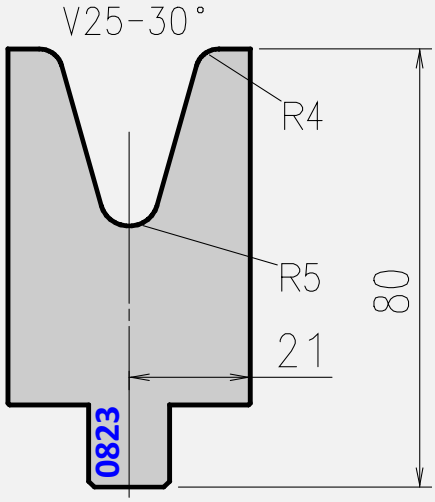

Die 0823 replaces old die 14306

Tool angle	Length mm	Item No.	Weight Kg
30°	835	ED 0823401	16,4
	415	ED 0823402	8,2
	800 sect.	ED 0823403	15,7

Standard Die 0871 (V 32)

1000 kN/m

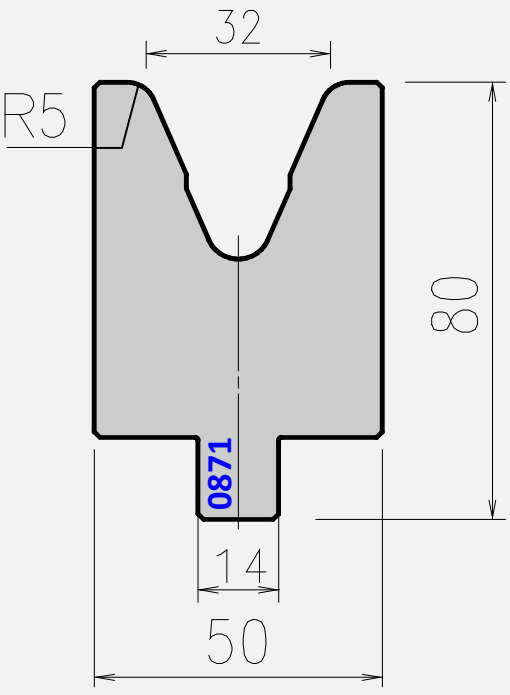

Die 0871 replaces old die 28700

Tool angle	Length mm	Item No.	Weight Kg
45°	835	ED 0871501	18,2
	415	ED 0871502	9,1
	800 sect.	ED 0871503	17,4

Standard Die 0881 (V 40)

1000 kN/m

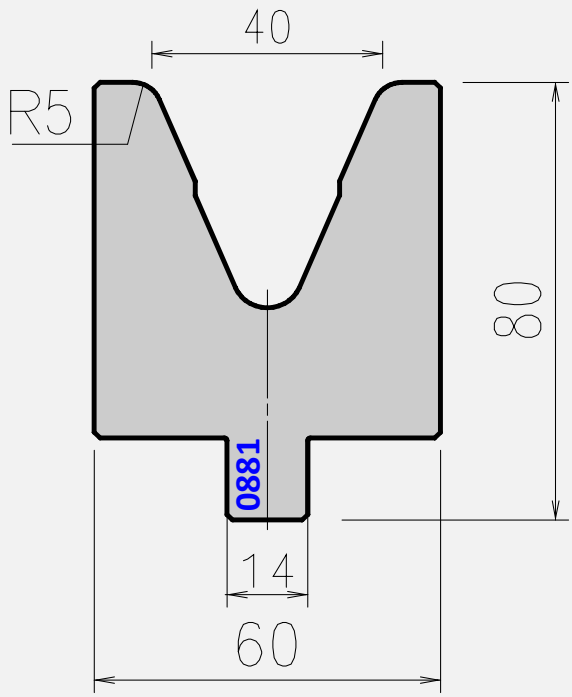

Die 0881 replaces old die 28800

Tool angle	Length mm	Item No.	Weight Kg
45°	835	ED 0881501	20,1
	415	ED 0881502	10,0
	800 sect.	ED 0881503	19,3

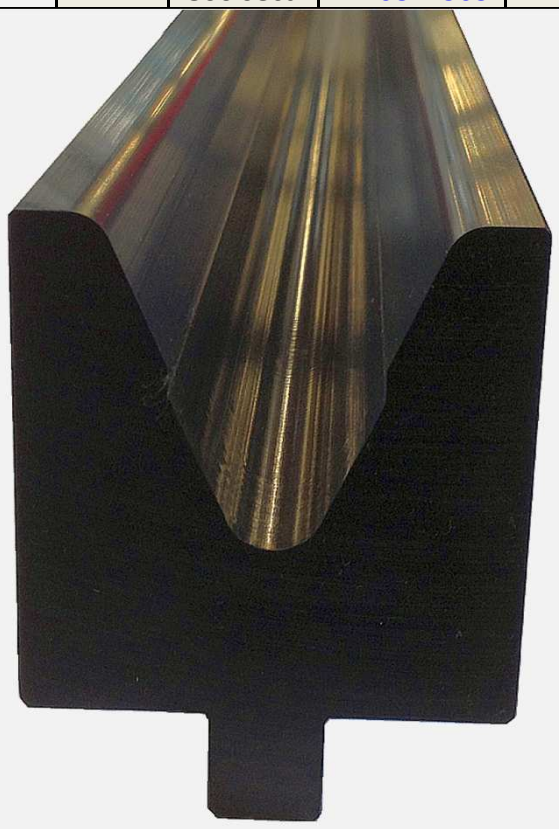

AFH Die 0706 (V 6)

380 kN/m

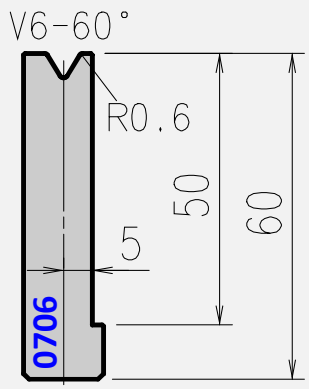

Die 0706 replaces old die 1700

Tool angle	Length mm	Item No.	Weight Kg
60°	835	ED 0706061	4,4
	415	ED 0706062	2,2
	800 sect.	ED 0706063	4,2

AFH Die 0716 (V 8)

450 kN/m

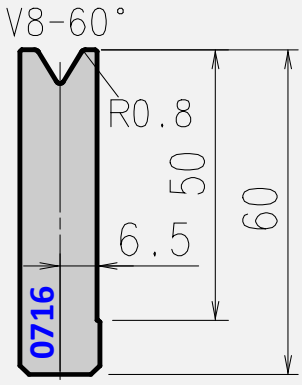

Die 0716 replaces old die 17100

Tool angle	Length mm	Item No.	Weight Kg
60°	835	ED 0716081	5,1
	415	ED 0716082	2,5
	800 sect.	ED 0716083	4,9

AFH Die 0726 (V 10)

550 kN/m

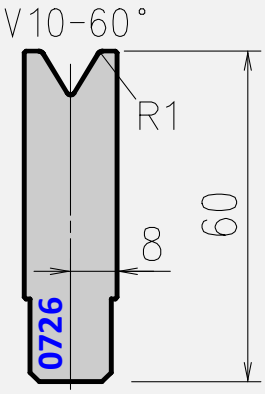

Die 0726 replaces old die 17200

Tool angle	Length mm	Item No.	Weight Kg
60°	835	ED 0726101	5,8
	415	ED 0726102	2,9
	800 sect.	ED 0726103	5,5

AFH Die 0746 (V 12)

550 kN/m

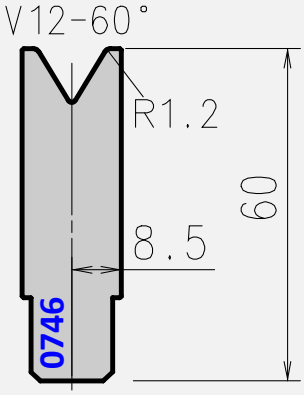

Die 0746 replaces old die 17400

Tool angle	Length mm	Item No.	Weight Kg
60°	835	ED 0746121	5,9
	415	ED 0746122	3,0
	800 sect.	ED 0746123	5,7

AFH Die 0776 (V 16)

650 kN/m

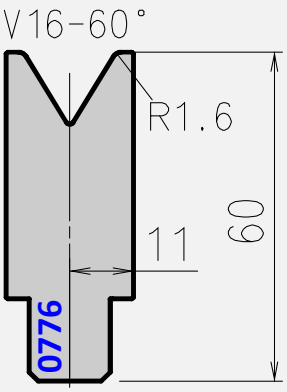

Die 0776 replaces old die 17700

Tool angle	Length mm	Item No.	Weight Kg
60°	835	ED 0776161	7,1
	415	ED 0776162	3,5
	800 sect.	ED 0776163	6,8

AFH Die 0796 (V 20)

850 kN/m

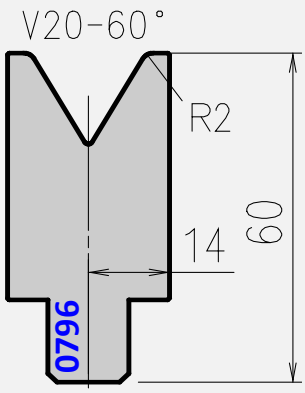

Die 0796 replaces old die 17900

Tool angle	Length mm	Item No.	Weight Kg
60°	835	ED 0796201	8,4
	415	ED 0796202	4,2
	800 sect.	ED 0796203	8,1

AFH Die 0826 (V 25)

850 kN/m

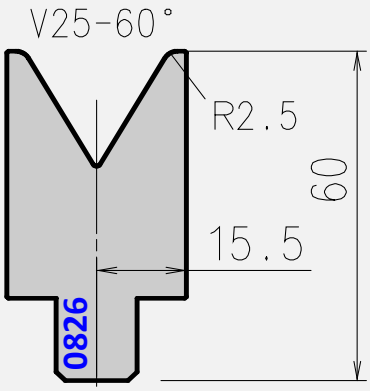

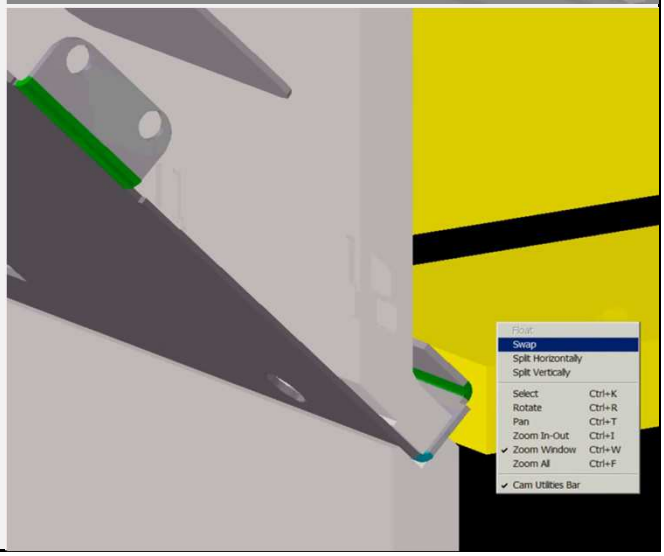

Die 0826 replaces old die 18200

Tool angle	Length mm	Item No.	Weight Kg
60°	835	ED 0826251	8,7
	415	ED 0826252	4,3
	800 sect.	ED 0826253	8,3

AFH Standard Die 084 (V 4)

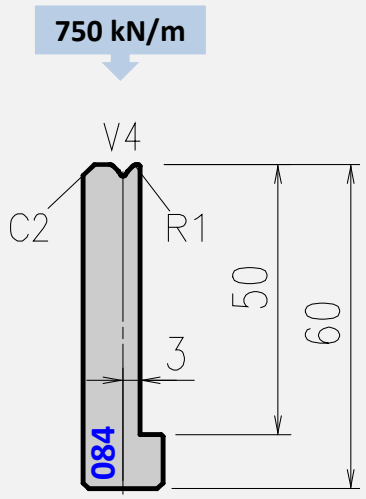

Die 084 replaces old dies 084 and A840

Tool angle	Length mm	Item No.	Weight Kg
86°	835	ED 0848101	4,1
	415	ED 0848102	2,1
	800 sect.	ED 0848103	4,0
88°	835	ED 0847101	4,1
	415	ED 0847102	2,1
	800 sect.	ED 0847103	4,0
90°	835	ED 0849101	4,1
	415	ED 0849102	2,1
	800 sect.	ED 0849103	4,0

Staged* Die 1848 (V 4)

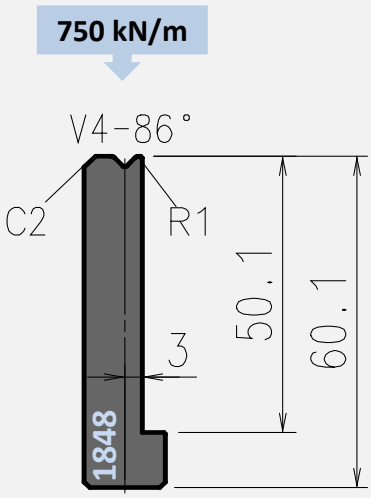

Die 1848 replaces old die S848

Tool angle	Length mm	Item No.	Weight Kg
86° staged	835	ED 1848101	4,3
	415	ED 1848102	2,2
	800 sect.	ED 1848103	4,1

AFH Standard Die 070 (V 6)

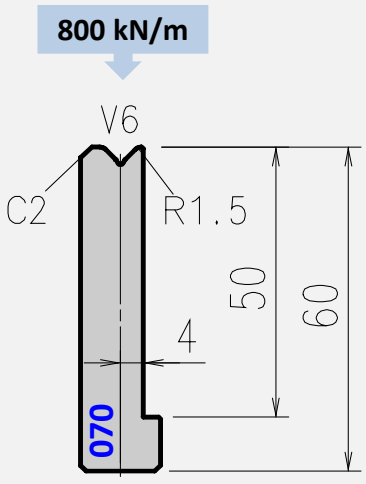

Die 070 replaces old dies 070 and A700

Tool angle	Length mm	Item No.	Weight Kg
86°	835	ED 0708151	4,4
	415	ED 0708152	2,2
	800 sect.	ED 0708153	4,2
88°	835	ED 0707151	4,4
	415	ED 0707152	2,2
	800 sect.	ED 0707153	4,2
90°	835	ED 0709151	4,4
	415	ED 0709152	2,2
	800 sect.	ED 0709153	4,2

Staged* Die 1708 (V 6)

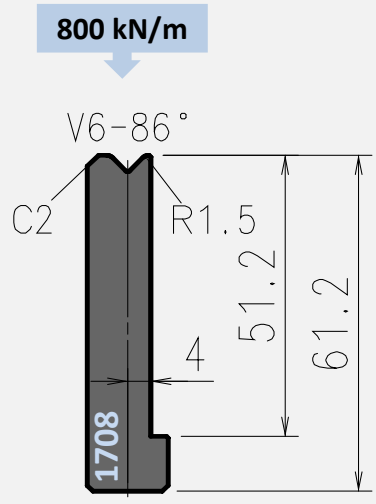

Die 1708 replaces old die S708

Tool angle	Length mm	Item No.	Weight Kg
86° staged	835	ED 1708151	4,6
	415	ED 1708152	2,3
	800 sect.	ED 1708153	4,4

AFH Standard Die 071 (V 8)

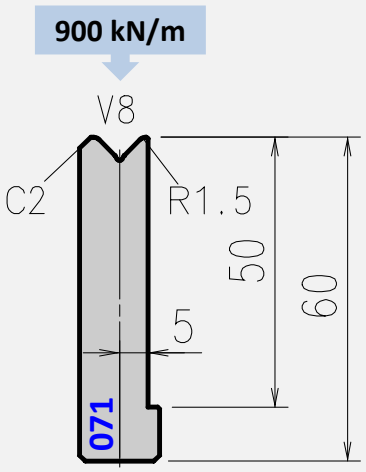

Die 071 replaces old dies 071 and A710

Tool angle	Length mm	Item No.	Weight Kg
86°	835	ED 0718151	4,7
	415	ED 0718152	2,3
	800 sect.	ED 0718153	4,5
88°	835	ED 0717151	4,7
	415	ED 0717152	2,3
	800 sect.	ED 0717153	4,5
90°	835	ED 0719151	4,7
	415	ED 0719152	2,3
	800 sect.	ED 0719153	4,5

Staged* Die 1718 (V 8)

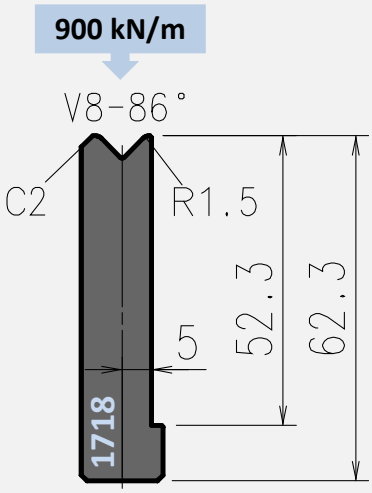

Die 1718 replaces old die S718

Tool angle	Length mm	Item No.	Weight Kg
86° staged	835	ED 1718151	4,9
	415	ED 1718152	2,5
	800 sect.	ED 1718153	4,7

AFH Standard Die 072 (V 10)

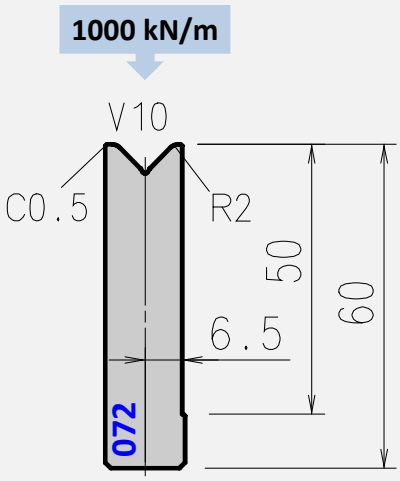

Die 072 replaces old dies 072 and A720

Tool angle	Length mm	Item No.	Weight Kg
86°	835	ED 0728201	5,2
	415	ED 0728202	2,6
	800 sect.	ED 0728203	4,9
88°	835	ED 0727201	5,2
	415	ED 0727202	2,6
	800 sect.	ED 0727203	4,9
90°	835	ED 0729201	5,2
	415	ED 0729202	2,6
	800 sect.	ED 0729203	4,9

Staged* Die 1728 (V 10)

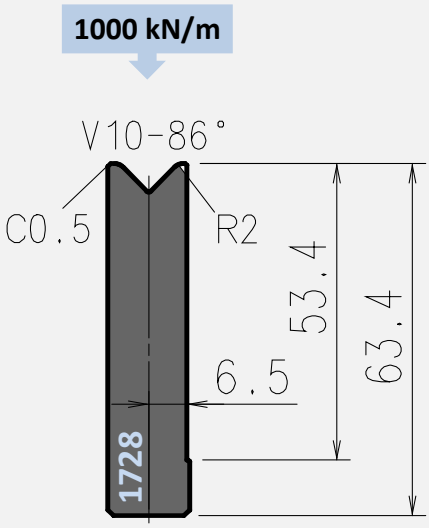

Die 1728 replaces old die S728

Tool angle	Length mm	Item No.	Weight Kg
86° staged	835	ED 1728201	5,4
	415	ED 1728202	2,7
	800 sect.	ED 1728203	5,2

AFH Standard Die 074 (V 12)

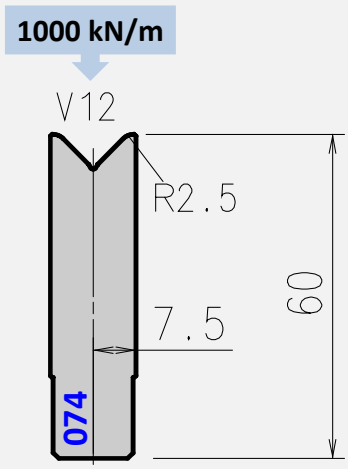

Die 074 replaces old dies 074 and A740

Tool angle	Length mm	Item No.	Weight Kg
86°	835	ED 0748251	5,5
	415	ED 0748252	2,7
	800 sect.	ED 0748253	5,3
88°	835	ED 0747251	5,5
	415	ED 0747252	2,7
	800 sect.	ED 0747253	5,3
90°	835	ED 0749251	5,5
	415	ED 0749252	2,7
	800 sect.	ED 0749253	5,3

Staged* Die 1748 (V 12)

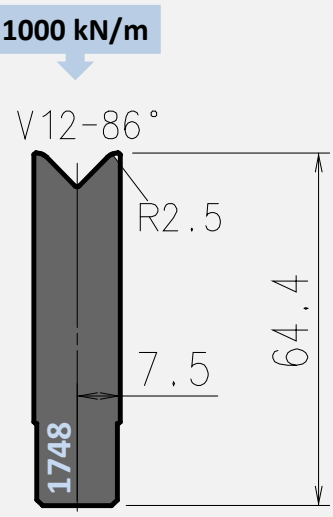

Die 1748 replaces old die S748

Tool angle	Length mm	Item No.	Weight Kg
86° staged	835	ED 1748251	5,8
	415	ED 1748252	2,9
	800 sect.	ED 1748253	5,6

AFH Standard Die 076 (V 14)

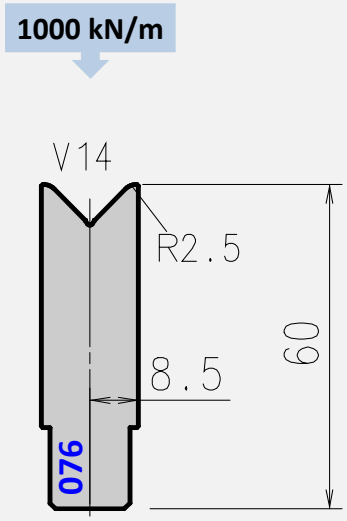

Die 076 replaces old dies 076 and A760

Tool angle	Length mm	Item No.	Weight Kg
86°	835	ED 0768251	6,0
	415	ED 0768252	3,0
	800 sect.	ED 0768253	5,8
88°	835	ED 0767251	6,0
	415	ED 0767252	3,0
	800 sect.	ED 0767253	5,8

AFH Standard Die 077 (V 16)

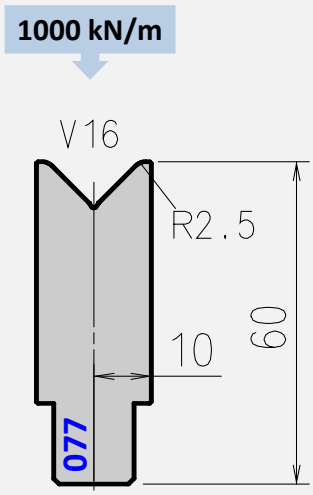

Die 077 replaces old dies 077 and A770

Tool angle	Length mm	Item No.	Weight Kg
86°	835	ED 0778251	6,8
	415	ED 0778252	3,4
	800 sect.	ED 0778253	6,5
88°	835	ED 0777251	6,8
	415	ED 0777252	3,4
	800 sect.	ED 0777253	6,5

Staged* Die 1778 (V 16)

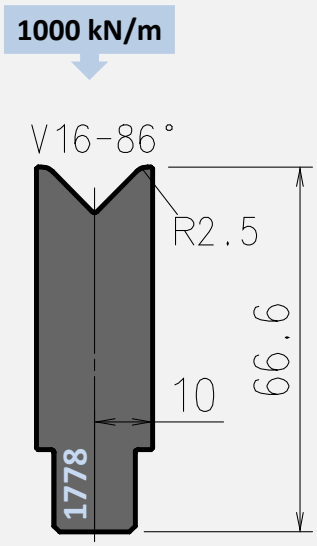

Die 1778 replaces old die S778

Tool angle	Length mm	Item No.	Weight Kg
86° staged	835	ED 1778251	7,4
	415	ED 1778252	3,7
	800 sect.	ED 1778253	7,1

AFH Standard Die 078 (V 18)

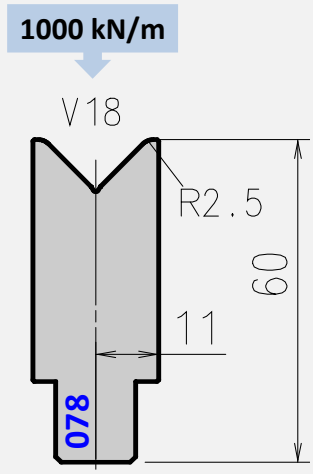

Die 078 replaces old dies 078 and A780

Tool angle	Length mm	Item No.	Weight Kg
86°	835	ED 0788251	7,3
	415	ED 0788252	3,6
	800 sect.	ED 0788253	7,0
88°	835	ED 0787251	7,3
	415	ED 0787252	3,6
	800 sect.	ED 0787253	7,0

AFH Standard Die 079 (V 20)

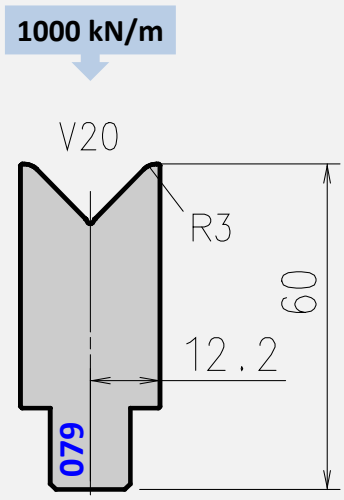

Die 079 replaces old dies 079 and A790

Tool angle	Length mm	Item No.	Weight Kg
86°	835	ED 0798301	7,8
	415	ED 0798302	3,9
	800 sect.	ED 0798303	7,5
88°	835	ED 0797301	7,8
	415	ED 0797302	3,9
	800 sect.	ED 0797303	7,5

Staged* Die 1798 (V 20)

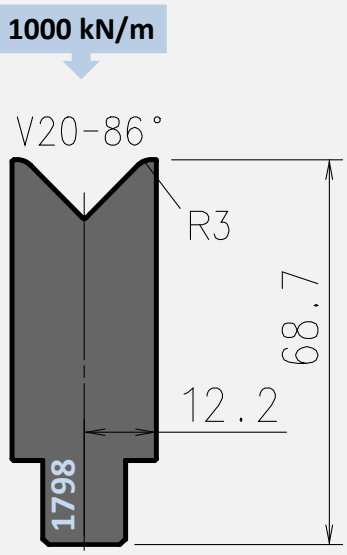

Die 1798 replaces old die S798

Tool angle	Length mm	Item No.	Weight Kg
86° staged	835	ED 1798301	8,9
	415	ED 1798302	4,4
	800 sect.	ED 1798303	8,5

AFH Standard Die 082 (V 25)

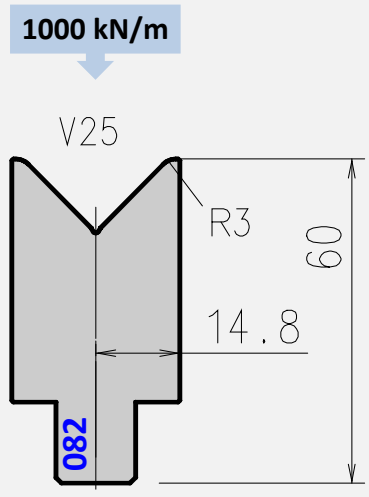

Die 082 replaces old dies 082 and A820

Tool angle	Length mm	Item No.	Weight Kg
86°	835	ED 0828301	9,0
	415	ED 0828302	4,5
	800 sect.	ED 0828303	8,6
88°	835	ED 0827301	9,0
	415	ED 0827302	4,5
	800 sect.	ED 0827303	8,6

Staged* Die 1828 (V 25)

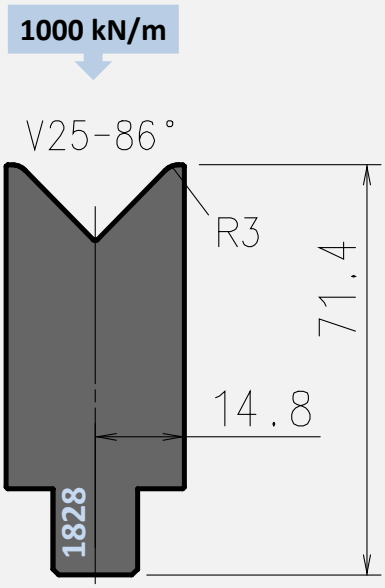

Die 1828 replaces old die S828

Tool angle	Length mm	Item No.	Weight Kg
86° staged	835	ED 1828301	10,6
	415	ED 1828302	5,3
	800 sect.	ED 1828303	10,2

AFH Standard Die 0874 (V 32)

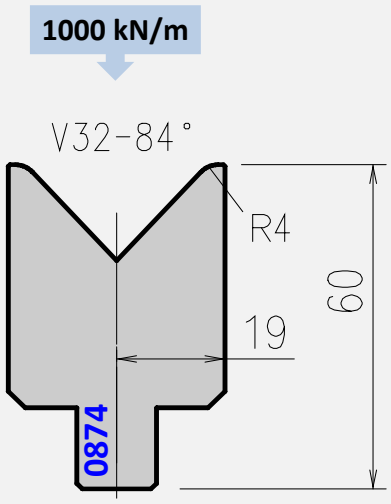

Die 0874 replaces old die A870

Tool angle	Length mm	Item No.	Weight Kg
84°	835	ED 0874401	10,6
	415	ED 0874402	5,3
	800 sect.	ED 0874403	10,2

AFH Standard Die 0884 (V 40)

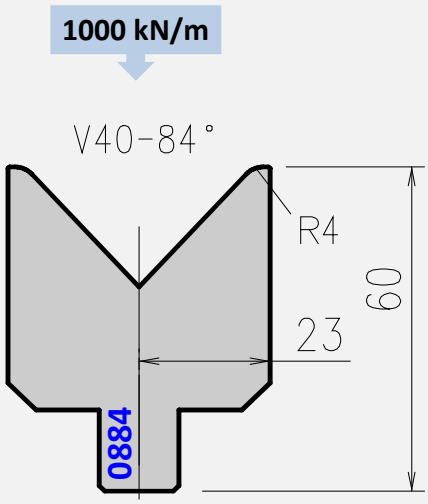

Die 0884 replaces old die A880

Tool angle	Length mm	Item No.	Weight Kg
84°	835	ED 0884401	11,8
	415	ED 0884402	5,9
	800 sect.	ED 0884403	11,3

Staged Punch Holder 0282 (to use with H90 mm punches)

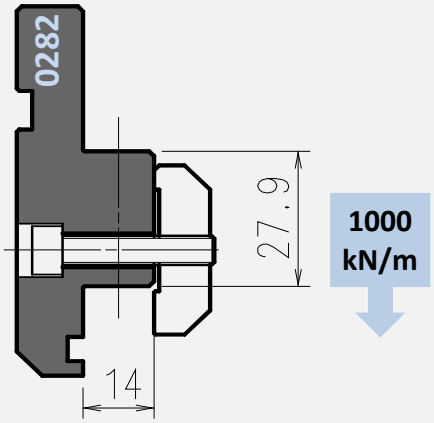

Holder 0282 replaces old holder SPH282

Length mm	Item No.	Weight Kg
415	EH 0282002	4,3

Staged Punch Holder 0582 (to use with H120 mm punches)

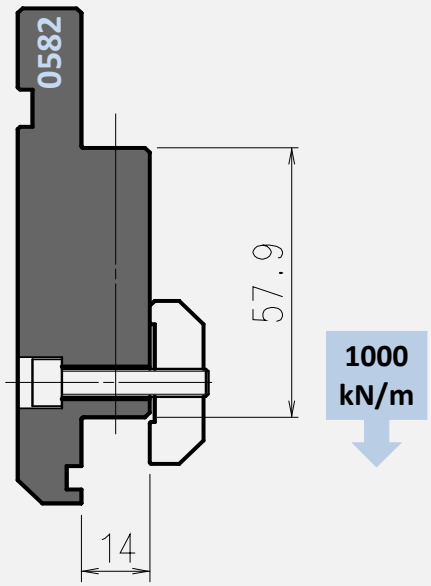

Holder 0582 replaces old holder SPH582

Length mm	Item No.	Weight Kg
415	EH 0582002	7,5

Staged Hemming Tool 1600

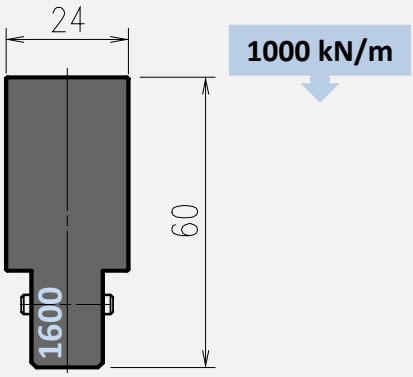

Tool 1600 replaces old tool SF600

Length mm	Item No.	Weight Kg
835	ED 1600001	8,0
415	ED 1600002	4,0
800 sect.	ED 1600003	7,7

Note:
Staged hemming tool is reversible and can be mounted on a punch or die holder.

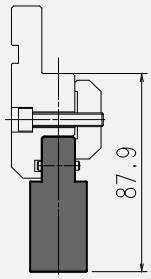

Hemming punch

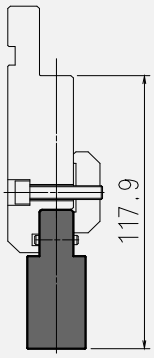

Hemming punch H120

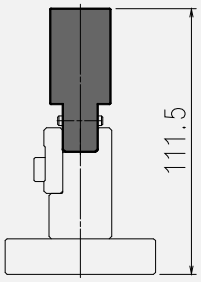

Hemming die

Tool Stop for flattening

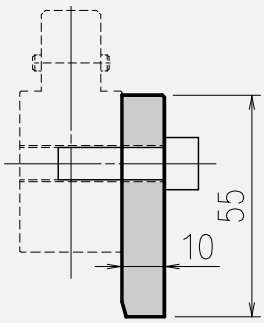

Note:
Tool stop prevents thrust forces from affecting the rest of tooling system.

Tool stop 1600 replaces old tool stop SF601

Length mm	Item No.	Weight Kg
835	ED 1600011	3,7
415	ED 1600012	1,8
800 sect.	ED 1600013	3,5

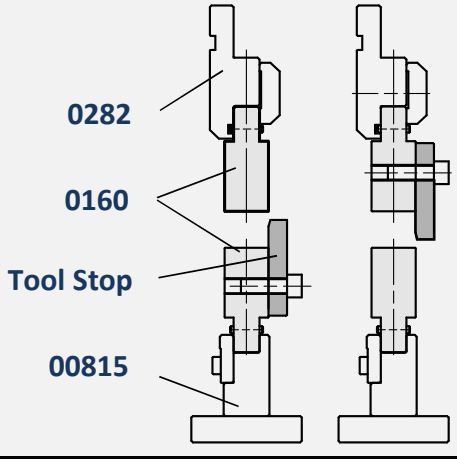

Staged Offset Tool Z3

1000 kN/m

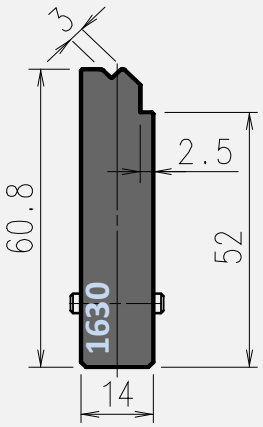

Tool 1630 replaces old tool SZ03

Length mm	Item No.	Weight Kg
835	ED 1630061	5,4
415	ED 1630062	2,7
800 sect.	ED 1630063	5,2

Staged Offset Tool Z4

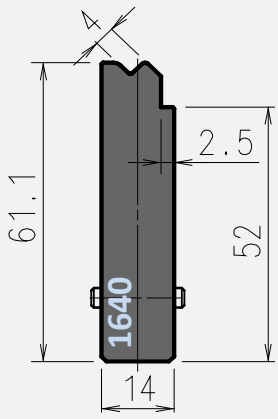

Tool 1640 replaces old tool SZ04

Item No.	Weight Kg
ED 1640081	5,4
ED 1640082	2,7
ED 1640083	5,2

Staged Offset Tool Z5

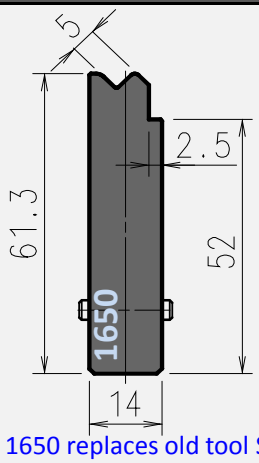

Tool 1650 replaces old tool SZ05

Item No.	Weight Kg
ED 1650101	5,4
ED 1650102	2,7
ED 1650103	5,2

Staged Offset Tool Z6

1000 kN/m

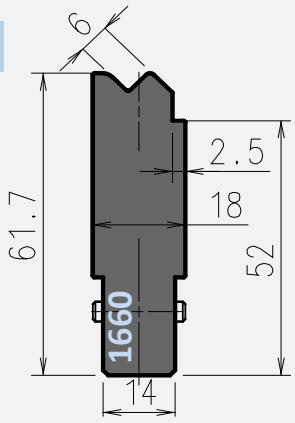

Tool 1660 replaces old tool SZ06

Length mm	Item No.	Weight Kg
835	ED 1660101	6,4
415	ED 1660102	3,2
800 sect.	ED 1660103	6,1

Staged Offset Tool Z8

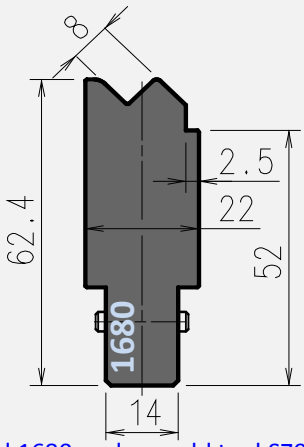

Tool 1680 replaces old tool SZ08

Item No.	Weight Kg
ED 1680101	7,5
ED 1680102	3,7
ED 1680103	7,2

Staged Offset Tool Z10

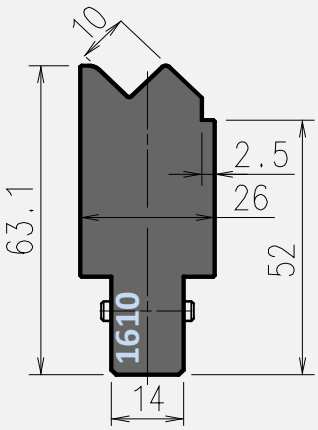

Tool 1610 replaces old tool SZ10

Item No.	Weight Kg
ED 1610101	8,6
ED 1610102	4,3
ED 1610103	8,2

Note:

- **Staged offset tools are reversible and can be mounted on a punch or die holder**
- **Use with holder 0282 for H=90mm and with 0582 for H=120mm punch height**
- **Two of each code are required when ordering a punch and die set**

As top tool

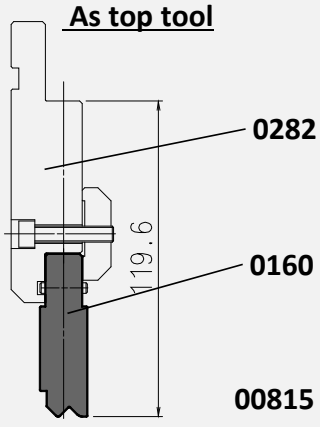

As bottom tool

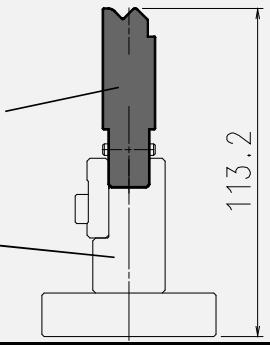

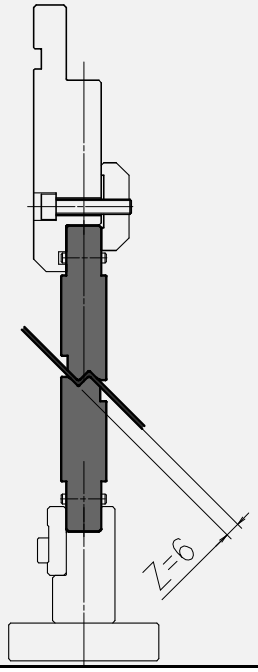

90° 2V dies (V4 to V9)

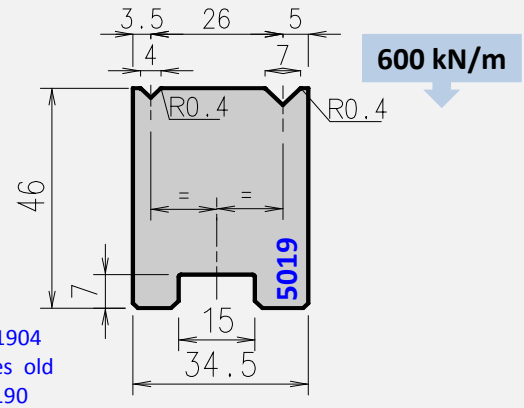

Die 501904 replaces old die 50190

Tool angle	Length mm	Item No.	Weight Kg
90°	835	ED 5019041	9,6
	415	ED 5019042	4,8
	800 sect.	ED 5019043	9,2

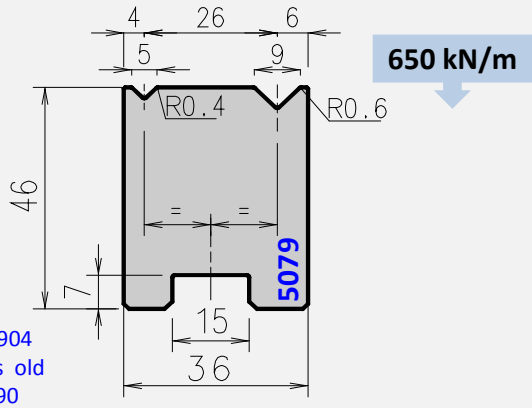

Die 507904 replaces old die 50790

Tool angle	Length mm	Item No.	Weight Kg
90°	835	ED 5079041	10,0
	415	ED 5079042	5,0
	800 sect.	ED 5079043	9,6

90° 2V dies (V6 to V12)

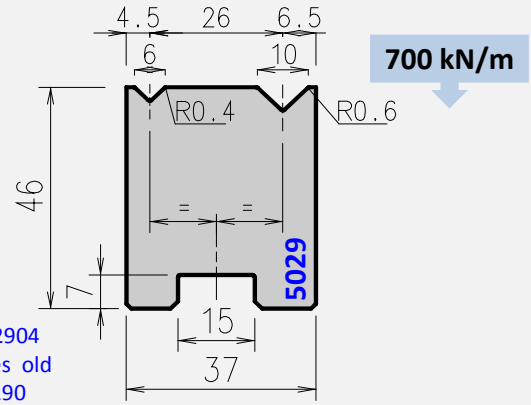

Die 502904 replaces old die 50290

Tool angle	Length mm	Item No.	Weight Kg
90°	835	ED 5029041	10,3
	415	ED 5029042	5,1
	800 sect.	ED 5029043	9,9

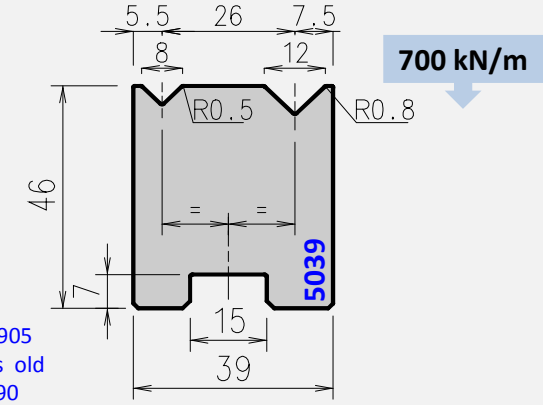

Die 503905 replaces old die 50390

Tool angle	Length mm	Item No.	Weight Kg
90°	835	ED 5039051	10,7
	415	ED 5039052	5,3
	800 sect.	ED 5039053	10,3

88° 2V dies (V4 to V10)

600 kN/m

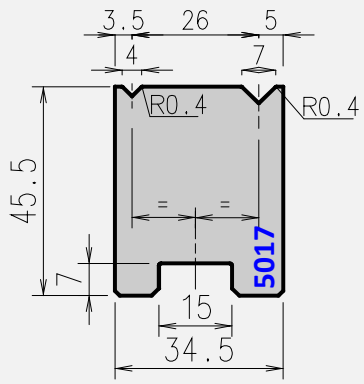

Die 501704 replaces old die 50196

Tool angle	Length mm	Item No.	Weight Kg
88°	835	ED 5017041	9,5
	415	ED 5017042	4,7
	800 sect.	ED 5017043	9,1

650 kN/m

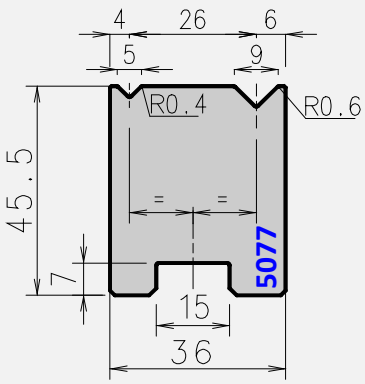

Die 507704 replaces old die 50796

Item No.	Weight Kg
ED 5077041	9,9
ED 5077042	4,9
ED 5077043	9,5

700 kN/m

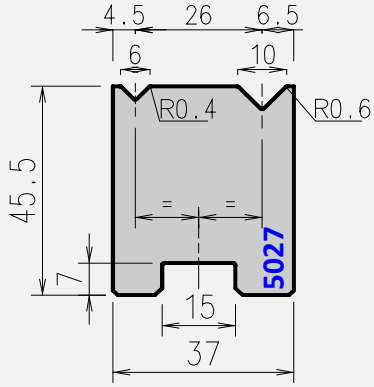

Die 502704 replaces old die 50296

Item No.	Weight Kg
ED 5027041	10,2
ED 5027042	5,1
ED 5027043	9,8

88° 2V dies (V8 to V20)

700 kN/m

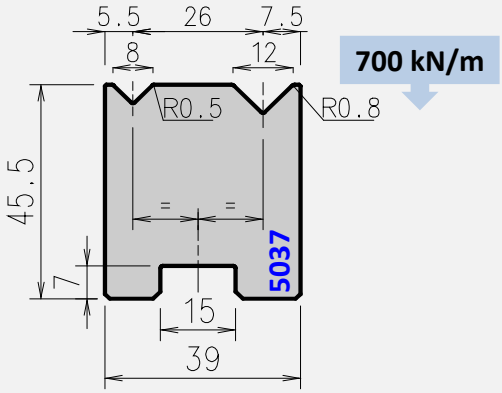

Die 503705 replaces old die 50396

Tool angle	Length mm	Item No.	Weight Kg
88°	835	ED 5037051	10,6
	415	ED 5037052	5,3
	800 sect.	ED 5037053	10,2

1000 kN/m

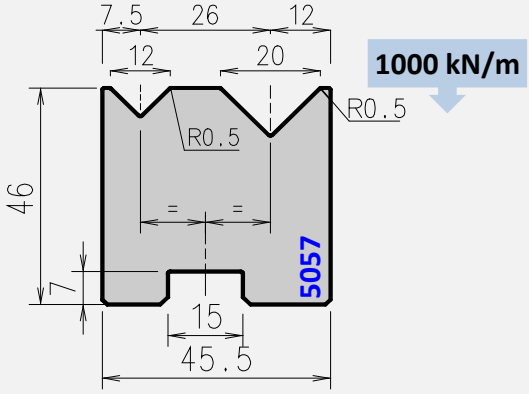

Die 505705 replaces old die 50590

Tool angle	Length mm	Item No.	Weight Kg
88°	835	ED 5057051	12,1
	415	ED 5057052	6,0
	800 sect.	ED 5057053	11,6

88° 2V dies (V14 to V25)

1000 kN/m

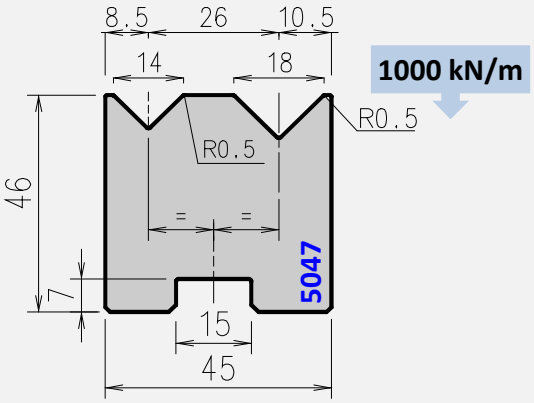

Die 504705 replaces old die 50490

Tool angle	Length mm	Item No.	Weight Kg
88°	835	ED 5047051	12,0
	415	ED 5047052	6,0
	800 sect.	ED 5047053	11,5

1000 kN/m

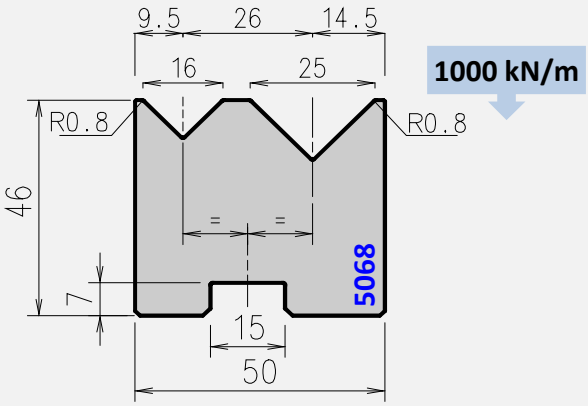

Die 506708 replaces old die 50690

Tool angle	Length mm	Item No.	Weight Kg
88°	835	ED 5067081	12,9
	415	ED 5067082	6,4
	800 sect.	ED 5067083	12,4

30° - 2V dies (V6 to V12)

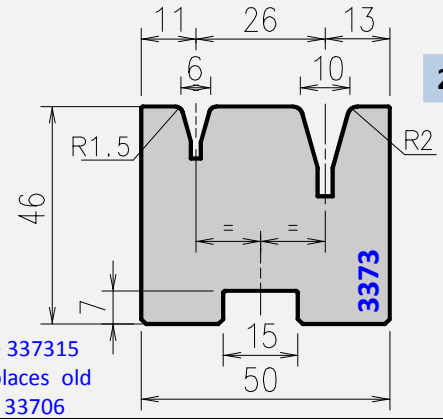

Die 337315
replaces old
die 33706

Tool angle	Length mm	Item No.	Weight Kg
30°	835	ED 3373151	13,5
	415	ED 3373152	6,7
	800 sect.	ED 3373153	12,9

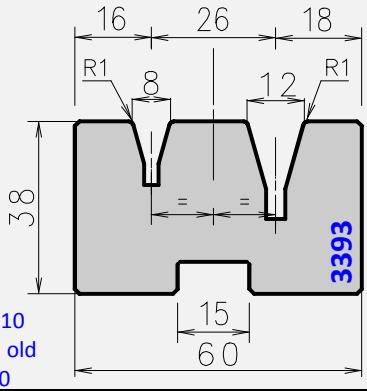

Die 339310
replaces old
die 33900

Tool angle	Length mm	Item No.	Weight Kg
30°	835	ED 3393101	12,9
	415	ED 3393102	6,4
	800 sect.	ED 3393103	12,4

60° - 2V dies (V6 to V12)

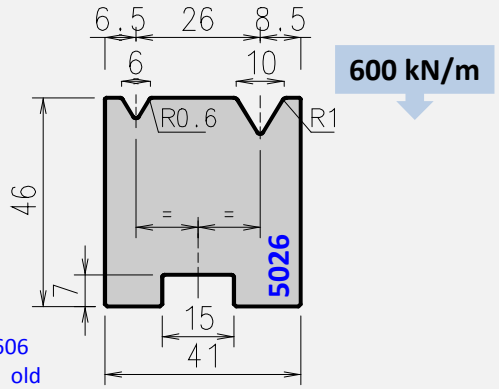

Die 502606
replaces old
die 50260

Tool angle	Length mm	Item No.	Weight Kg
60°	835	ED 5026061	11,3
	415	ED 5026062	5,6
	800 sect.	ED 5026063	10,8

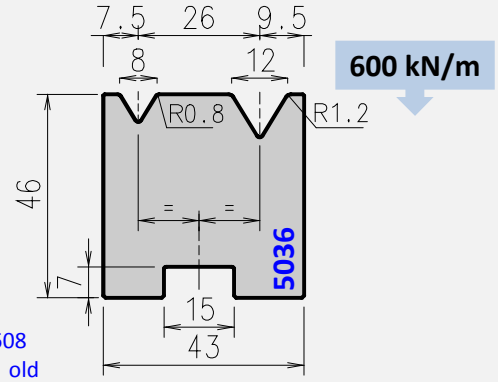

Die 503608
replaces old
die 50360

Tool angle	Length mm	Item No.	Weight Kg
60°	835	ED 5036081	11,7
	415	ED 5036082	5,8
	800 sect.	ED 5036083	11,2

60° - 2V dies (V16 to V25)

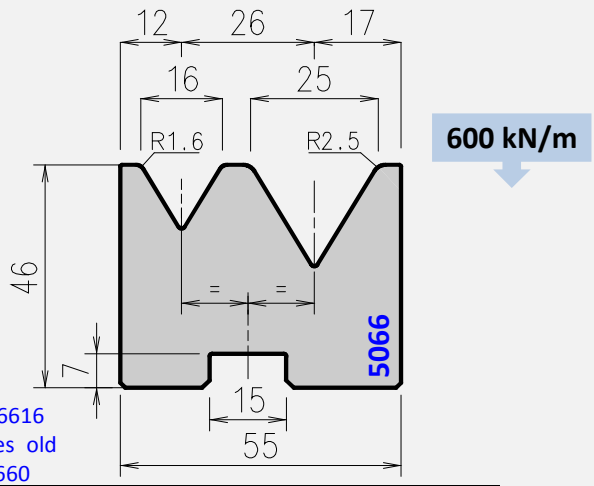

Die 506616
replaces old
die 50660

Tool angle	Length mm	Item No.	Weight Kg
60°	835	ED 5066161	13,4
	415	ED 5066162	6,7
	800 sect.	ED 5066163	12,8

V18 and V25 - 30° Large V dies

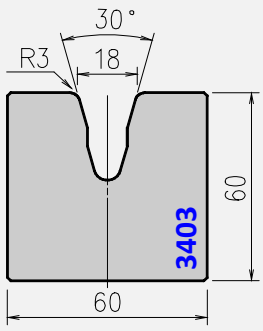

1000 kN/m

Die 340330 replaces old die 34000

Tool angle	Length mm	Item No.	Weight Kg
30°	835	ED 3403301	21,4
	415	ED 3403302	10,6
	800 sect.	ED 3403303	20,5

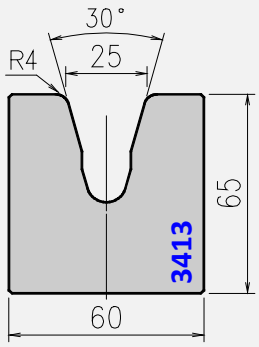

1000 kN/m

Die 341340 replaces old die 34100

Tool angle	Length mm	Item No.	Weight Kg
30°	835	ED 3413401	21,7
	415	ED 3413402	10,8
	800 sect.	ED 3413403	20,8

V32 and V40 - 45° Large V dies

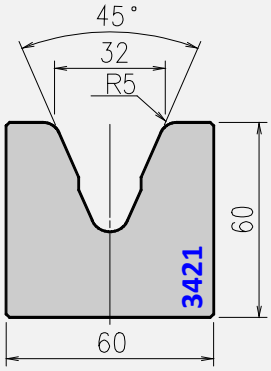

1000 kN/m

Die 342150 replaces old die 34200

Tool angle	Length mm	Item No.	Weight Kg
45°	835	ED 3421501	19,3
	415	ED 3421502	9,6
	800 sect.	ED 3421503	18,5

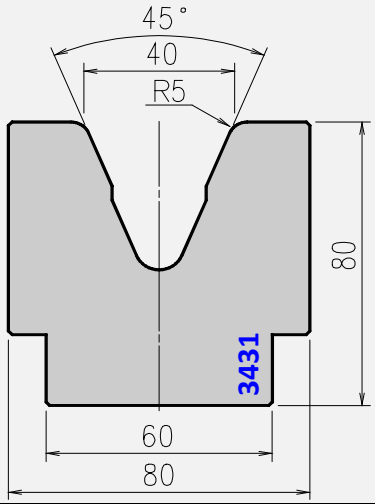

700 kN/m

Hardness: 52-56 HRC inductionhard. Depth: 2mm

Die 343150 replaces old die 34300

Tool angle	Length mm	Item No.	Weight Kg
45°	835	ED 3431501	33,3
	415	ED 3431502	16,6
	800 sect.	ED 3431503	31,9

V63 and V80 - 60° Large V dies

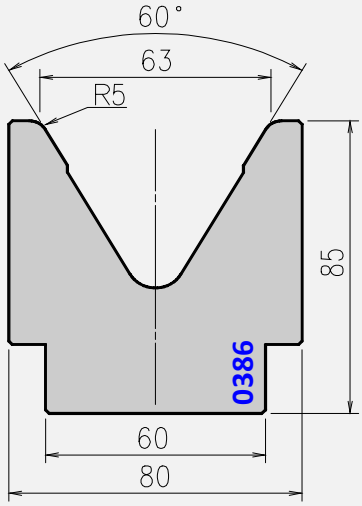

1000 kN/m

Hardness: 52-56 HRC inductionhard. Depth: 2mm

Die 038650 replaces old die 03806

Tool angle	Length mm	Item No.	Weight Kg
60°	835	ED 0386501	32,4
	415	ED 0386502	16,2

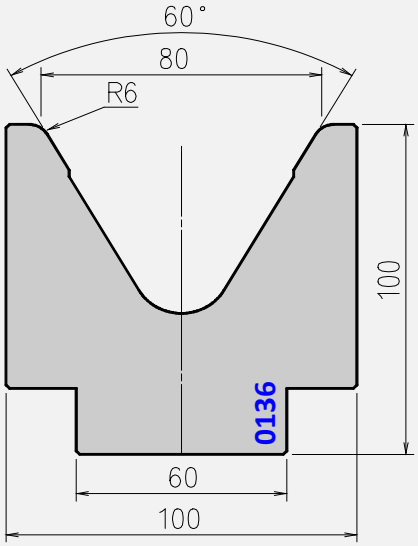

1000 kN/m

Hardness: 52-56 HRC inductionhard. Depth: 2mm

Die 013660 replaces old die 01306

Tool angle	Length mm	Item No.	Weight Kg
60°	835	ED 0136601	41,9
	415	ED 0136602	21,9

V32 and V40 - 85° Large V dies

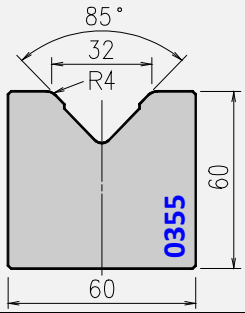

1000 kN/m

Die 035540 replaces old die 03500

Tool angle	Length mm	Item No.	Weight Kg
85°	835	ED 0355401	21,5
	415	ED 0355402	10,7
	800 sect.	ED 0355403	20,6

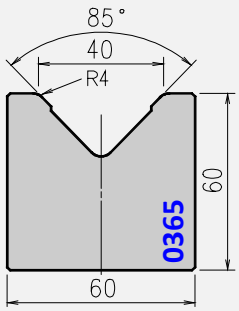

1000 kN/m

Die 036540 replaces old die 03600

Tool angle	Length mm	Item No.	Weight Kg
85°	835	ED 0365401	20,4
	415	ED 0365402	10,1
	800 sect.	ED 0365403	19,5

V50 and V63 - 85° Large V dies

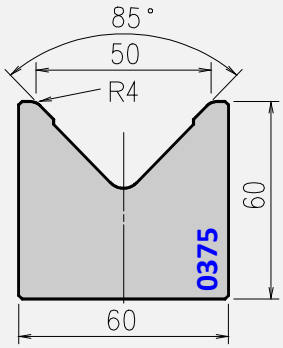

1000 kN/m

Die 037540 replaces old die 03700

Tool angle	Length mm	Item No.	Weight Kg
85°	835	ED 0375401	18,7
	415	ED 0375402	9,3
	800 sect.	ED 0375403	17,9

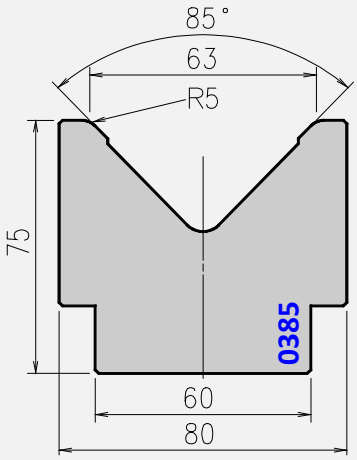

1000 kN/m

Hardness: 52-56 HRC inductionhard. Depth: 2mm

Die 038550 replaces old dies 03800 and Z0063

Tool angle	Length mm	Item No.	Weight Kg
85°	835	ED 0385501	28,8
	415	ED 0385502	14,4
	800 sect.	ED 0385503	27,6

V80 - 85° and V100 - 80° Large V dies

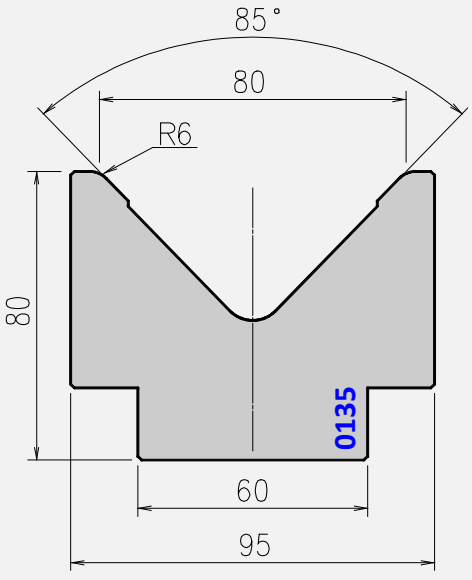

1000 kN/m

Hardness: 52-56 HRC inductionhard. Depth: 2mm

Die 013560 replaces old die Z0080

Tool angle	Length mm	Item No.	Weight Kg
85°	835	ED 0135601	36,1
	415	ED 0135602	18,0

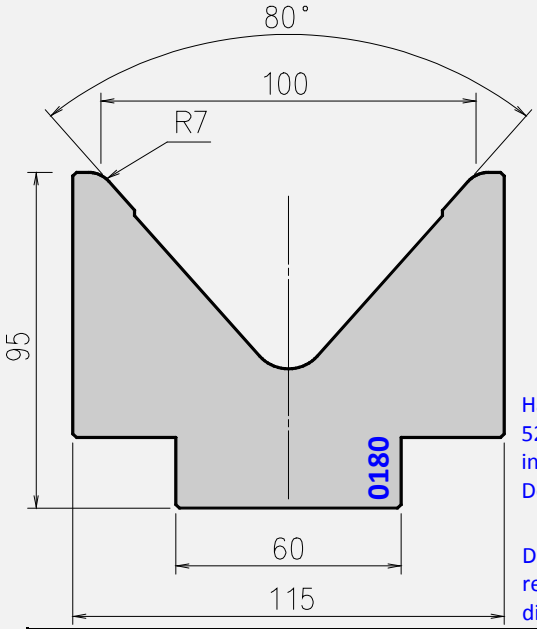

1000 kN/m

Hardness: 52-56 HRC inductionhard. Depth: 2mm

Die 018070 replaces old die Z0100

Tool angle	Length mm	Item No.	Weight Kg
80°	835	ED 0180701	46,2
	415	ED 0180702	23,1

V125 and V160 - 80° Large V dies

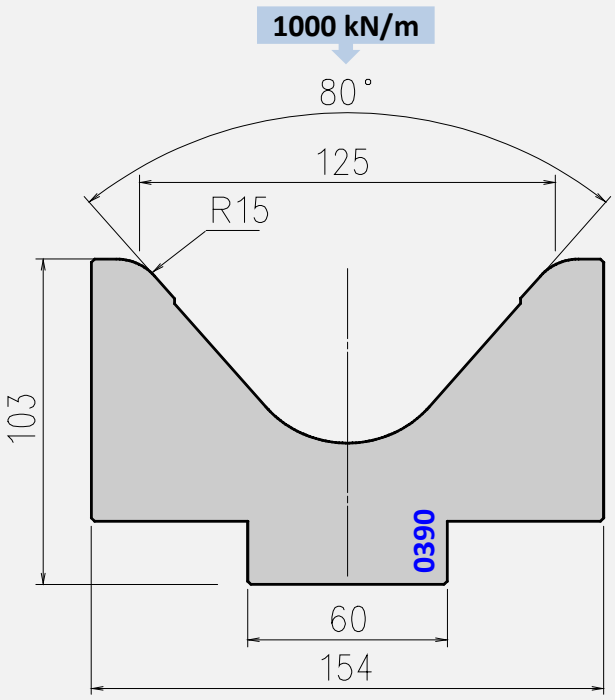

Hardness: 52-56 HRC; inductionhard.; Depth: 2mm
Die 039015 replaces old die Z0125

Tool angle	Length mm	Item No.	Weight Kg
80°	835	ED 0390151	72,8
	415	ED 0390152	36,4

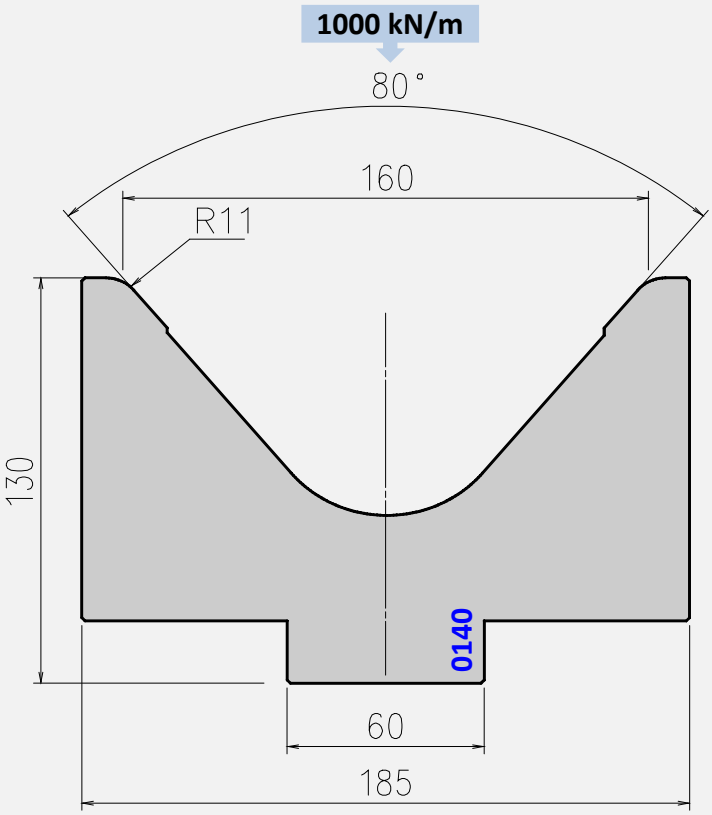

Hardness: 52-56 HRC; inductionhard.; Depth: 2mm
Die 014011 replaces old die Z0160

Tool angle	Length mm	Item No.	Weight Kg
80°	835	ED 0140111	102,8
	415	ED 0140112	51,4

4V - 85° - 88°

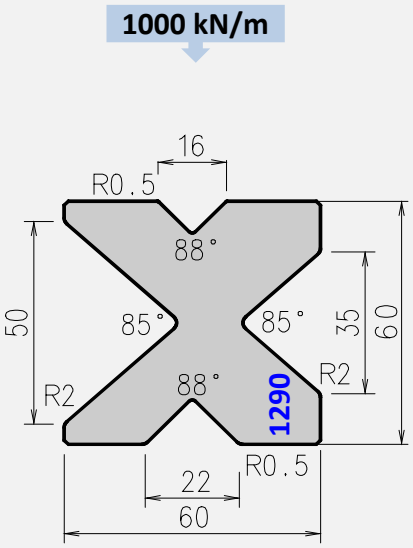

Hardness: 52-56 HRC;
inductionhard.; Depth: 2mm
Die 129000 replaces old die Z0000

Length mm	Item No.	Weight Kg
835	ED 1290001	18,0
415	ED 1290002	9,0

4V - 60°

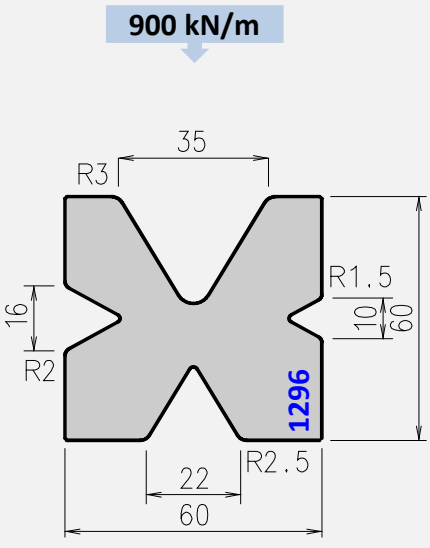

Hardness: 52-56 HRC;
inductionhard.; Depth: 2mm
Die 129600 replaces old die Z0006

Item No.	Weight Kg
ED 1296001	16,4
ED 1296002	8,2

3U - 90°

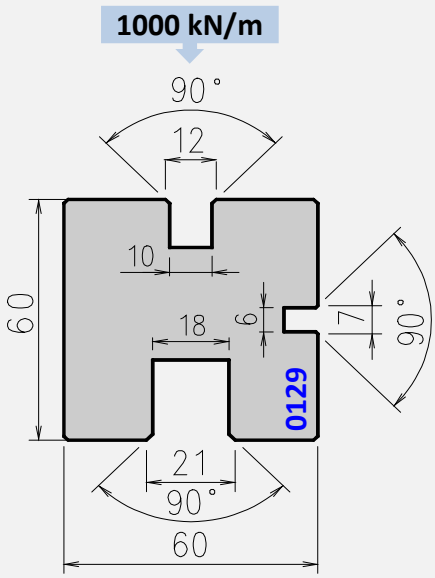

Hardness: 52-56 HRC;
inductionhard.; Depth: 2mm
Die 012900 replaces old die 01200

Item No.	Weight Kg
ED 0129001	20,2
ED 0129002	10,1

30° Hemming dies (V6 to V8)

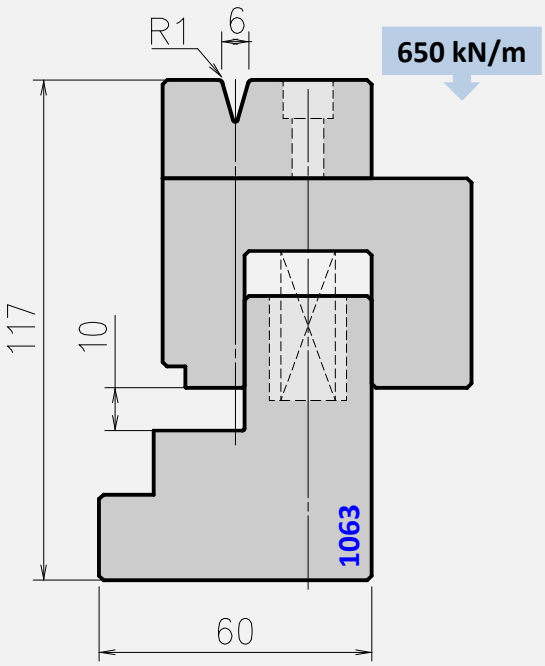

Die 106310 replaces old die 10469

Tool angle	Length mm	Item No.	Weight Kg
30°	835	ED 1063101	40,4
	415	ED 1063102	20,1

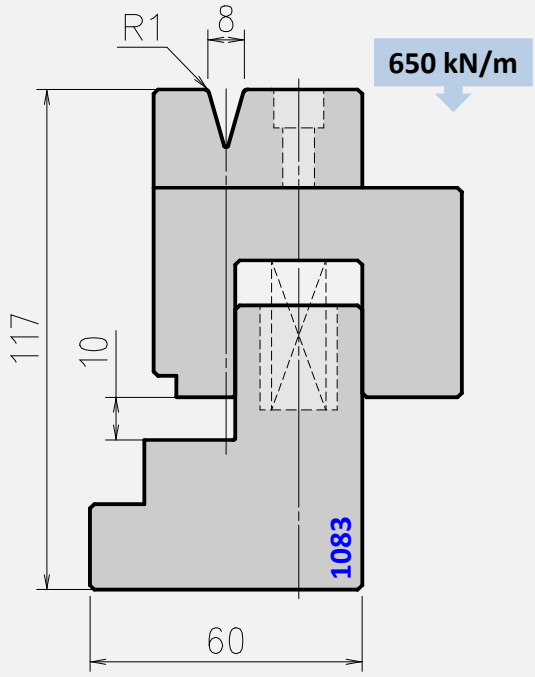

Die 108310 replaces old die 10409

Tool angle	Length mm	Item No.	Weight Kg
30°	835	ED 1083101	40,2
	415	ED 1083102	20,0

Replacement parts for 30° Hemming dies (V6 to V8)

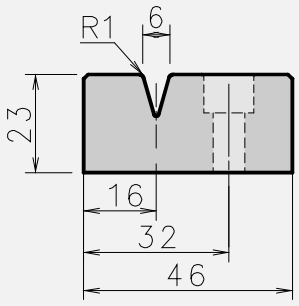

Die 006310 replaces old die 80149

Tool angle	Length mm	Item No.	Weight Kg
30°	835	ED 0063101	6,7
	415	ED 0063102	3,3

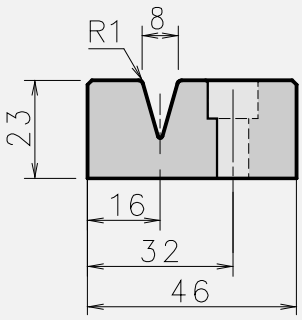

Die 008310 replaces old die 80139

Tool angle	Length mm	Item No.	Weight Kg
30°	835	ED 0083101	6,5
	415	ED 0083102	3,2

Sheet thickness t mm	Mild steel (400 N/mm²)			Stainless steel (600 N/mm²)		
	C mm	C Tonnage kN/m	2xt Tonnage kN/m	C mm	C Tonnage kN/m	2xt Tonnage kN/m
0,60	3	90	230	3	150	350
0,80	3	120	320	3	200	500
1,00	3,5	150	400	3,5	250	600
1,25	3,5	170	500	3,5	260	800
1,50	4,6	220	630	4,6	380	950
2,00	5,5	300	800	5,5	500	1300
2,50	6,5	550	900	6,5	900	1800
3,00	8	700	1000	8	1000	2100

26° Hemming dies (V10 to V12)

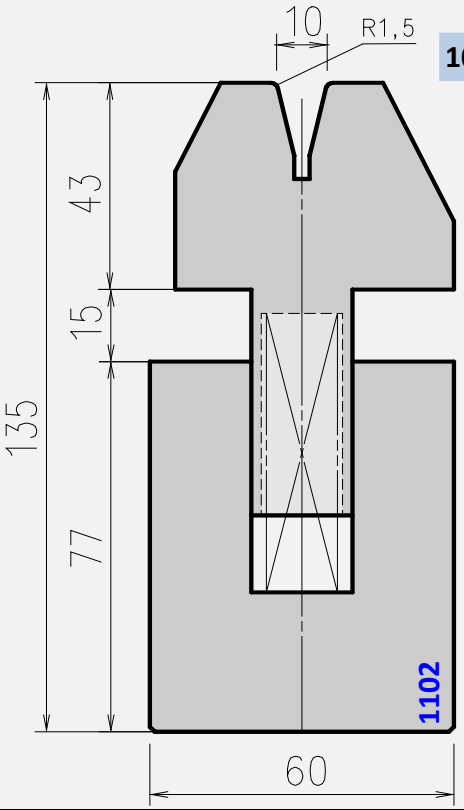

Tool angle	Length mm	Item No.	Weight Kg
26°	835	ED 1102151	42,0
	415	ED 1102152	20,9

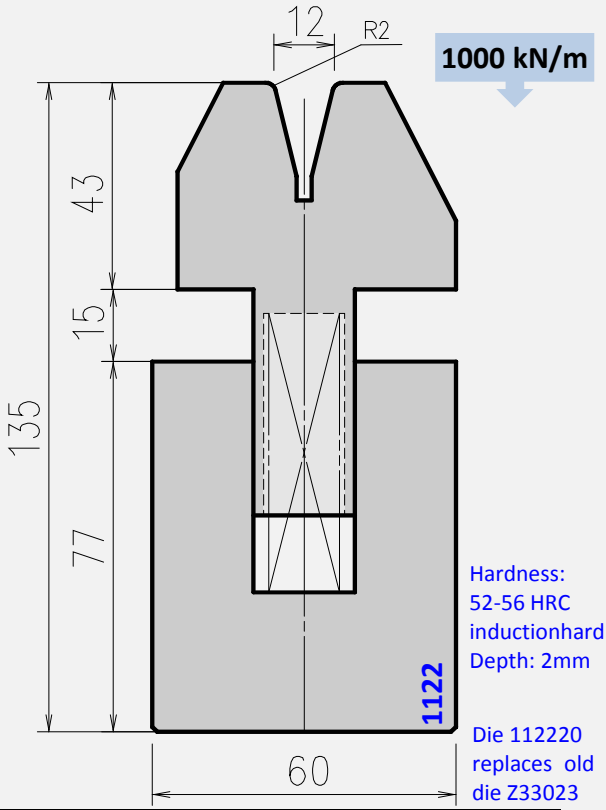

Tool angle	Length mm	Item No.	Weight Kg
26°	835	ED 1122201	41,8
	415	ED 1122202	20,8

30° Hemming insert dies (V6 to V8)

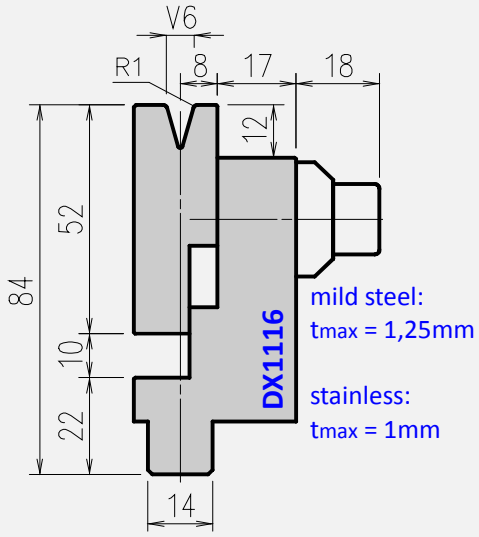

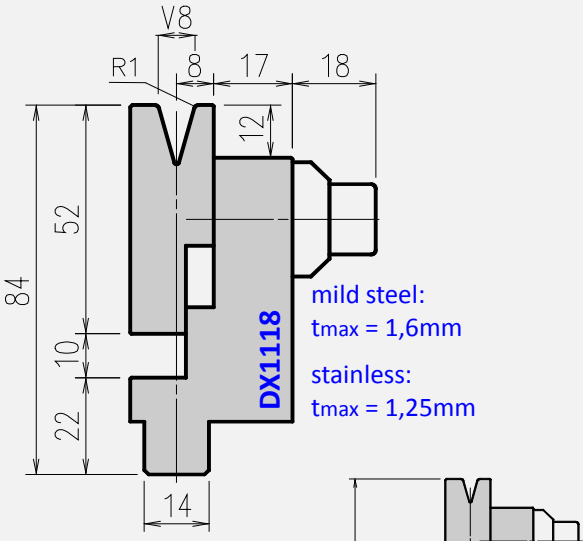

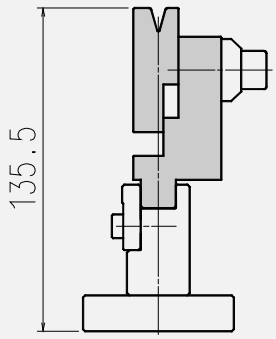

Note:

- Tonnage for 30° prebending : 500 kN/m
- Tonnage for flattening 800 kN/m
- 470 Sect. = 45 + 2x50 + 55 + 60 + 65 + 70 + 75
- tool hardness HRC 36 to 42

Tool angle	Length mm	Item No.	Weight Kg
30°	835	DX 111601	16,0
	415	DX 111602	8,0
	470 Sect.	DX 111681	9,0

Tool angle	Length mm	Item No.	Weight Kg
30°	835	DX 111801	16,0
	415	DX 111802	8,0
	470 Sect.	DX 111881	9,0

Pneumatic die holder (for standard and hemming bends)

The pneumatic die holder is a permanent fixture on the press brake machine and operates as:
- traditional die holder with standard (or special) dies for 90° or acute bends
- double decker hemming system with acute-angle dies. The pneumatic movement is considered as a programmable NC axis in the control system and ensures a rapid opening or closing.

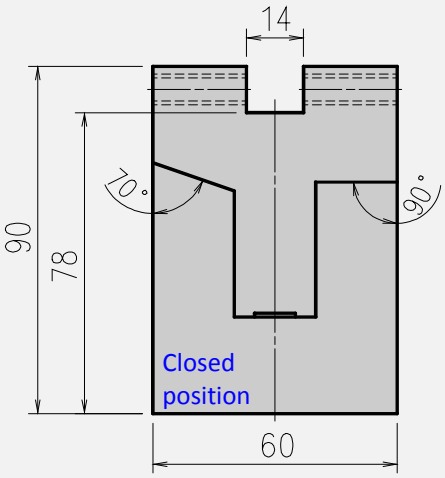

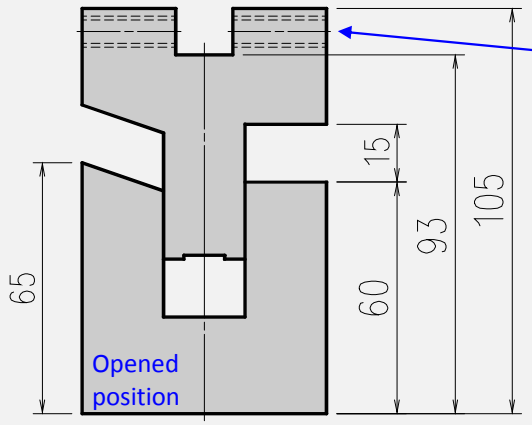

screw holes for mounting the optional clamps (during the use with large V dies)

Length mm	Item No.	Weight Kg
1250	T04066AN	50
2050	T04067AN	82
2550	T04068AN	102
3050	T04069AN	122
4050	T04070AN	162

Note:

- tonnage in closed position: up to 1000 kN/m, depends on die
- tonnage in opened position: up to 600 kN/m, depends on die
- die holder with induction hardened working surfaces (54-58 HRC)
- included accessories:
  - air distribution and regulation assy
  - relays 12V DC and 24V DC (according to your press brake)
  - air pipes and electric cables
  - temporary plates for easy installation
- please read operator's manual before installation

Optional clamps (with mounting hardware) for large V dies:
- for front side : T50001A and for rear side : T50002A
- please choose clamp quantity from the below table

For length	Front side	Rear side
1250 mm	6	6
2050 mm	10	10
2550 mm	13	13
3050 mm	15	15
4050 mm	20	20

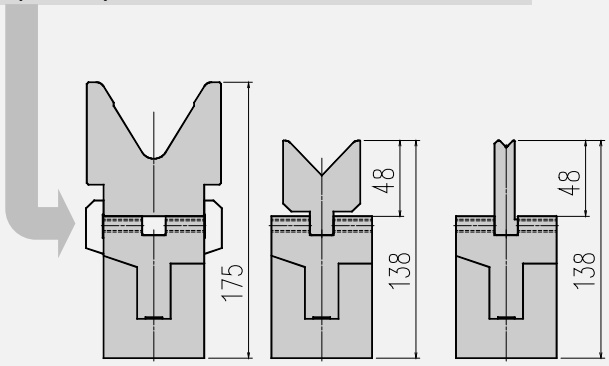

Use for standard bends: closed position

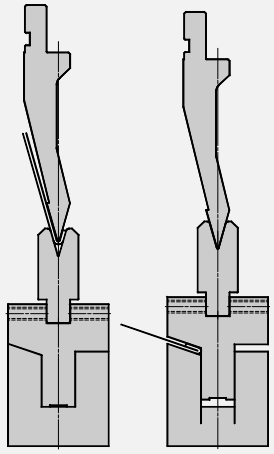

Use for hemming: closed and opened position

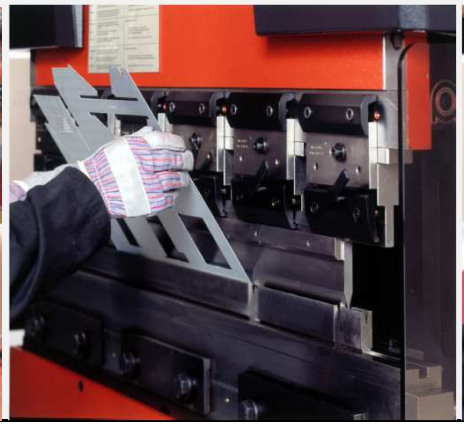

V4

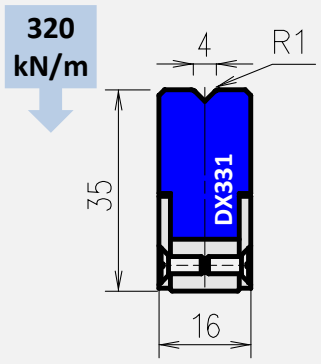

Tool angle	L mm	Item No.	Weight Kg
90°	835	DX 331001	1,2
	415	DX 331002	0,6

V6

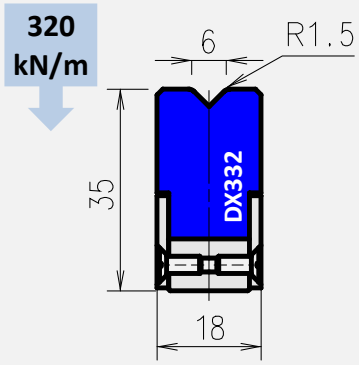

Tool angle	L mm	Item No.	Weight Kg
90°	835	DX 332001	1,4
	415	DX 332002	0,7

V8

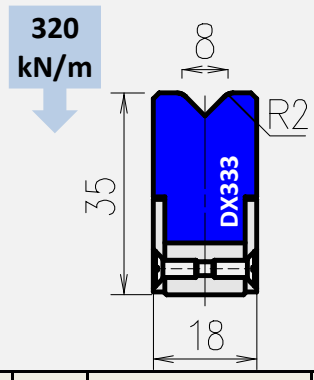

Tool angle	L mm	Item No.	Weight Kg
88°	835	DX 333001	1,4
	415	DX 333002	0,7

V10

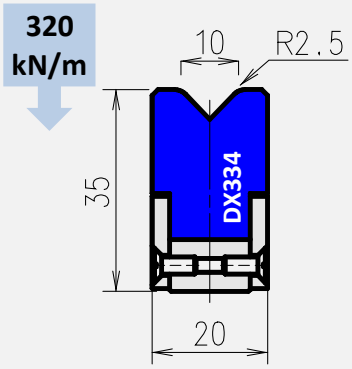

Tool angle	L mm	Item No.	Weight Kg
88°	835	DX 334001	1,6
	415	DX 334002	0,8

V12

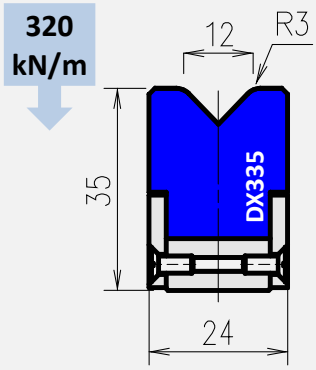

Tool angle	L mm	Item No.	Weight Kg
88°	835	DX 335001	2,0
	415	DX 335002	1,0

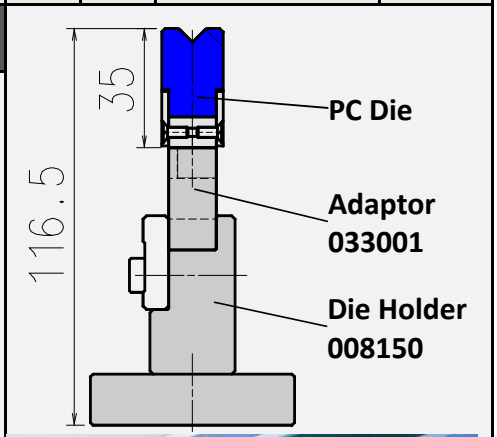

V32

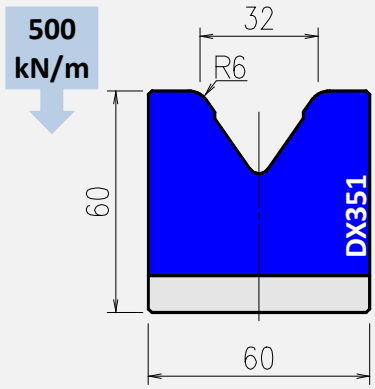

Tool angle	L mm	Item No.	Weight Kg
70°	835	DX 351001	8,4
	415	DX 351002	4,2

V40

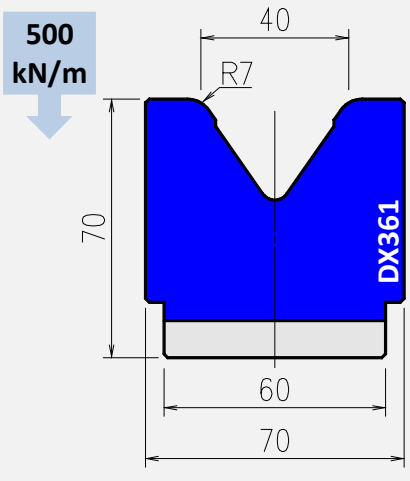

Tool angle	L mm	Item No.	Weight Kg
70°	835	DX 361001	9,2
	415	DX 361002	4,6

V50

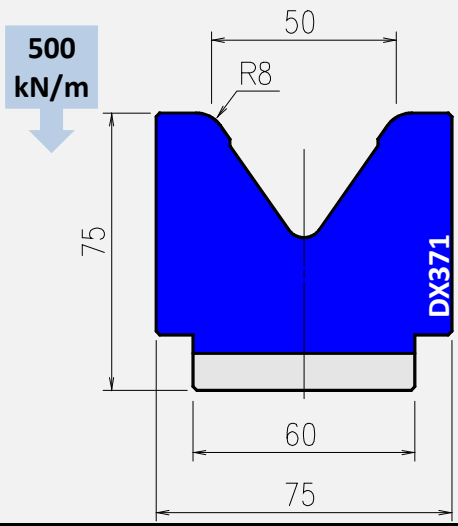

Tool angle	L mm	Item No.	Weight Kg
70°	835	DX 371001	9,5
	415	DX 371002	4,7

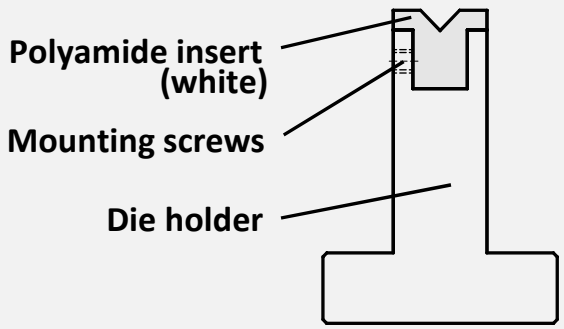

Holder for inserts W38

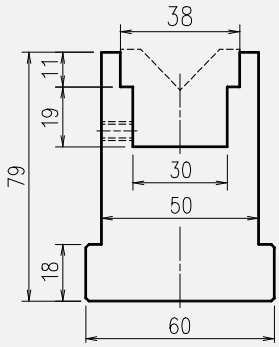

	L mm	Item No.	Weight Kg
W38	834	PT300001	20,5
	414	PT300002	10,2

Holder for inserts W24

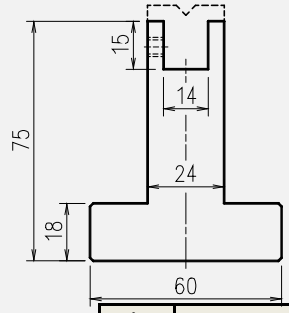

	L mm	Item No.	Weight Kg
W24	834	PT100001	14,6
	414	PT100002	7,3

Holder for inserts W35

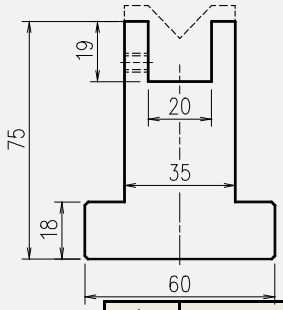

	L mm	Item No.	Weight Kg
W35	834	PT200001	17,6
	414	PT200002	8,7

Polyamide inserts W38

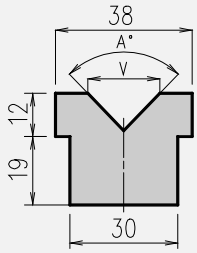

A°	V	L mm	Item No.	Weight Kg
88°	6	835	PT306881	1,0
		415	PT306882	0,5
	8	835	PT308881	1,0
		415	PT308882	0,5
	10	835	PT310881	1,0
		415	PT310882	0,5
	12	835	PT312881	0,9
		415	PT312882	0,5
	16	835	PT316881	1,0
		415	PT316882	0,5
	20	835	PT320881	0,9
		415	PT320882	0,5
	25	835	PT325881	0,9
		415	PT325882	0,5
60°	6	835	PT306601	1,0
		415	PT306602	0,5
	8	835	PT308601	1,0
		415	PT308602	0,5
	10	835	PT310601	1,0
		415	PT310602	0,5
	12	835	PT312601	1,0
		415	PT312602	0,5
	16	835	PT316601	0,9
		415	PT316602	0,5
	20	835	PT320601	0,9
		415	PT320602	0,5
30°	6	835	PT306301	1,0
		415	PT306302	0,5
	8	835	PT308301	1,0
		415	PT308302	0,5
	10	835	PT310301	0,9
		415	PT310302	0,5
	12	835	PT312301	0,9
		415	PT312302	0,5
	16	835	PT316301	0,8
		415	PT316302	0,4

Polyamide inserts W24

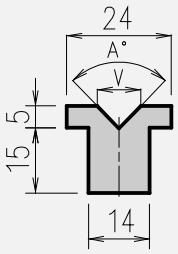

A°	V	L mm	Item No.	Weight Kg
88°	6	835	PT106881	0,3
		415	PT106882	0,2
	8	835	PT108881	0,3
		415	PT108882	0,2
	10	835	PT110881	0,3
		415	PT110882	0,2
60°	6	835	PT106601	0,3
		415	PT106602	0,2
	8	835	PT108601	0,3
		415	PT108602	0,2
	10	835	PT110601	0,3
		415	PT110602	0,2
30°	6	835	PT106301	0,3
		415	PT106302	0,2
	8	835	PT108301	0,3
		415	PT108302	0,2

Polyamide inserts W35

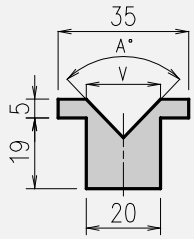

A°	V	L mm	Item No.	Weight Kg
88°	6	835	PT206881	0,5
		415	PT206882	0,3
	8	835	PT208881	0,5
		415	PT208882	0,3
	10	835	PT210881	0,5
		415	PT210882	0,3
	12	835	PT212881	0,5
		415	PT212882	0,3
	16	835	PT216881	0,5
		415	PT216882	0,3
60°	6	835	PT206601	0,5
		415	PT206602	0,3
	8	835	PT208601	0,5
		415	PT208602	0,3
	10	835	PT210601	0,5
		415	PT210602	0,3
	12	835	PT212601	0,5
		415	PT212602	0,3
	16	835	PT216601	0,4
		415	PT216602	0,2
30°	6	835	PT206301	0,5
		415	PT206302	0,3
	8	835	PT208301	0,5
		415	PT208302	0,3
	10	835	PT210301	0,5
		415	PT210302	0,3

Pad Holder 25

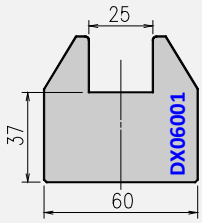

L mm	Item No.	Weight Kg
835	DX 060011	21
415	DX 060012	10,5

Urethane Pad 25

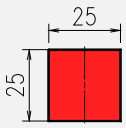

	L mm	Item No.	Weight Kg
Red Shore A 80°	835	DX 061111	1
	415	DX 061112	0,5
Blue Shore A 90°	835	DX 061121	1
	415	DX 061122	0,5

Pad Holder 30

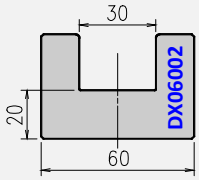

L mm	Item No.	Weight Kg
835	DX 060021	15
415	DX 060022	7,5

Urethane Pad 30

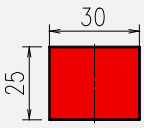

	L mm	Item No.	Weight Kg
Red Shore A 80°	835	DX 061211	1
	415	DX 061212	0,5
Blue Shore A 90°	835	DX 061221	1
	415	DX 061222	0,5

Pad Holder 50

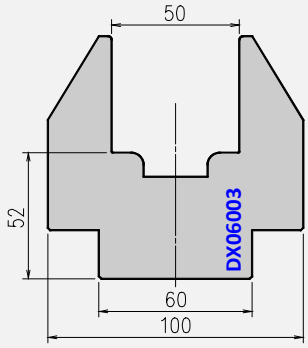

L mm	Item No.	Weight Kg
835	DX 060031	45
415	DX 060032	22,5

Urethane Pad 50

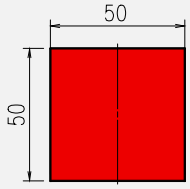

	L mm	Item No.	Weight Kg
Red Shore A 80°	835	DX 061311	3
	415	DX 061312	1,5
Blue Shore A 90°	835	DX 061321	3
	415	DX 061322	1,5

Pad Holder 80

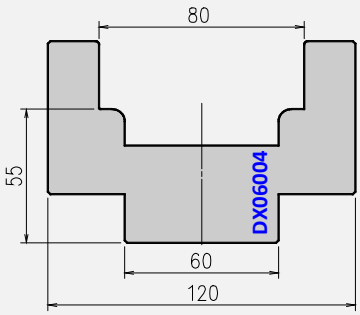

L mm	Item No.	Weight Kg
835	DX 060041	55
415	DX 060042	27,5

Urethane Pad 80

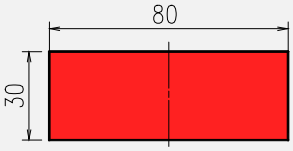

	L mm	Item No.	Weight Kg
Red Shore A 80°	835	DX 061411	3
	415	DX 061412	1,5
Blue Shore A 90°	835	DX 061421	3
	415	DX 061422	1,5

Pad Holder 110

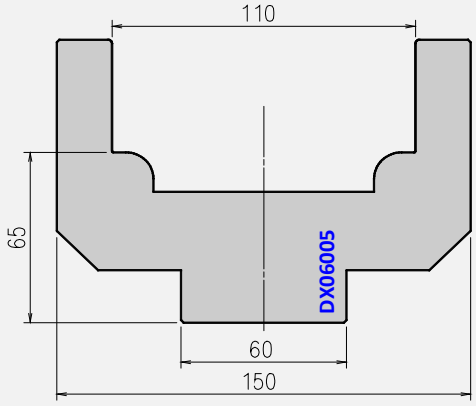

L mm	Item No.	Weight Kg
835	DX 060051	62
415	DX 060052	31

Urethane Pad 110

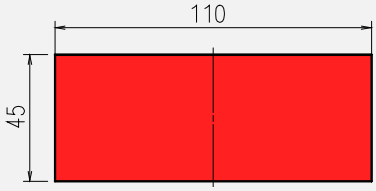

	L mm	Item No.	Weight Kg
Red Shore A 80°	835	DX 061511	5
	415	DX 061512	2,5
Blue Shore A 90°	835	DX 061521	5
	415	DX 061522	2,5

Urethane Sheet (RED)

0,3mm x 150mm

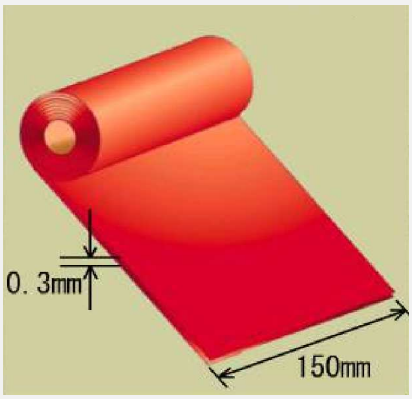

Item No.	L m
AC 426201	-

0,5mm x 150mm

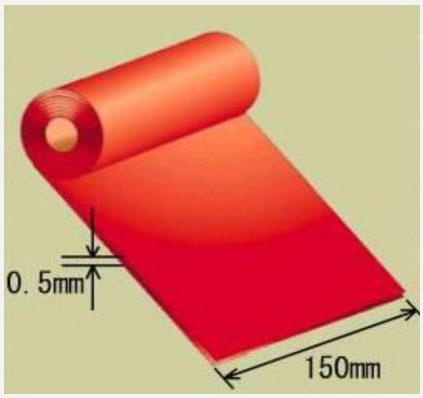

Item No.	L m
AC 426191	-

1 mm x 150mm

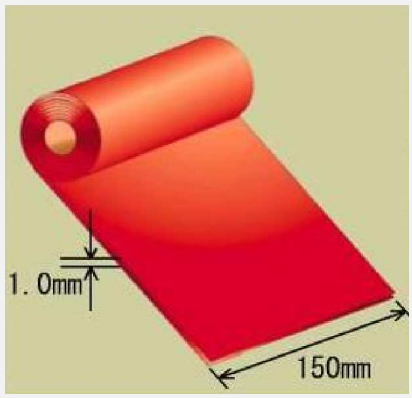

Item No.	L m
AC 426181	-

Note: Please provide required length when ordering

Adhesive Strip (WHITE 0,3 mm)

Item No.	L m
AC 909910	10

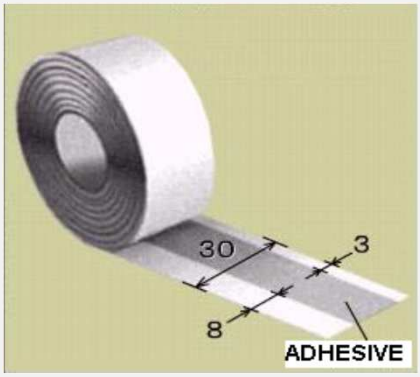

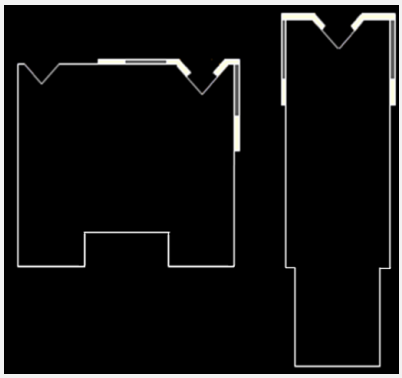

Urethane Cap (YELLOW 0,5 mm)

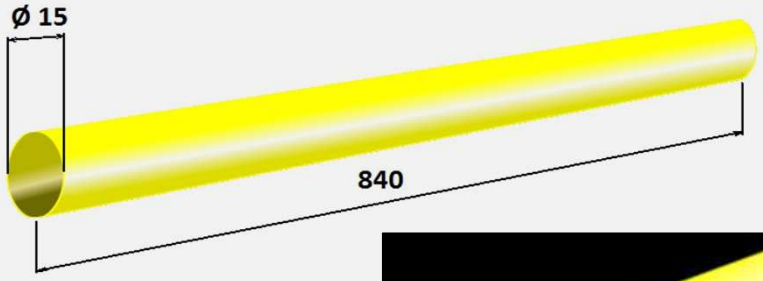

Item No.	Length
AC 909930	840mm x 5 off as set

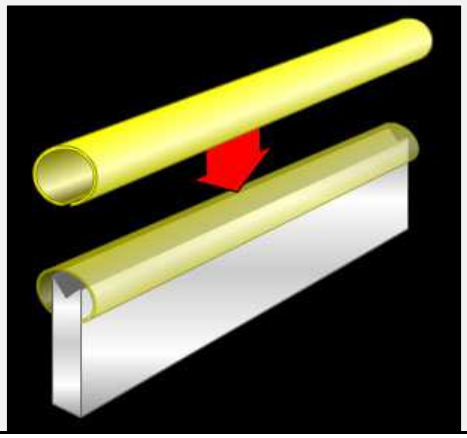

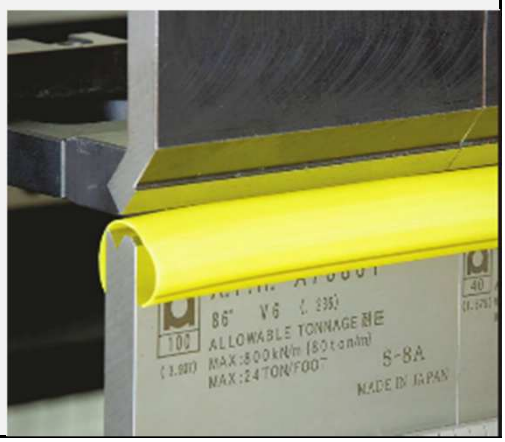

Die Holder 0815

Holder 0815 replaces old holders 80 and 815

Length mm	Item No.	Weight Kg
L=840mm	EH 0815001	12,4
S=420mm	EH 0815002	6,2

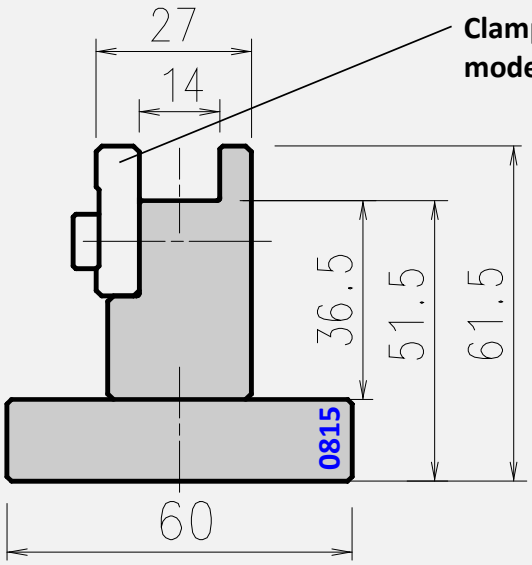

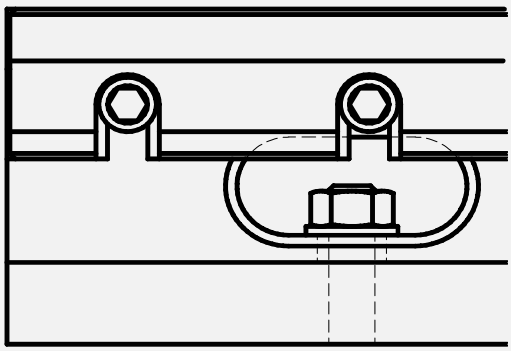

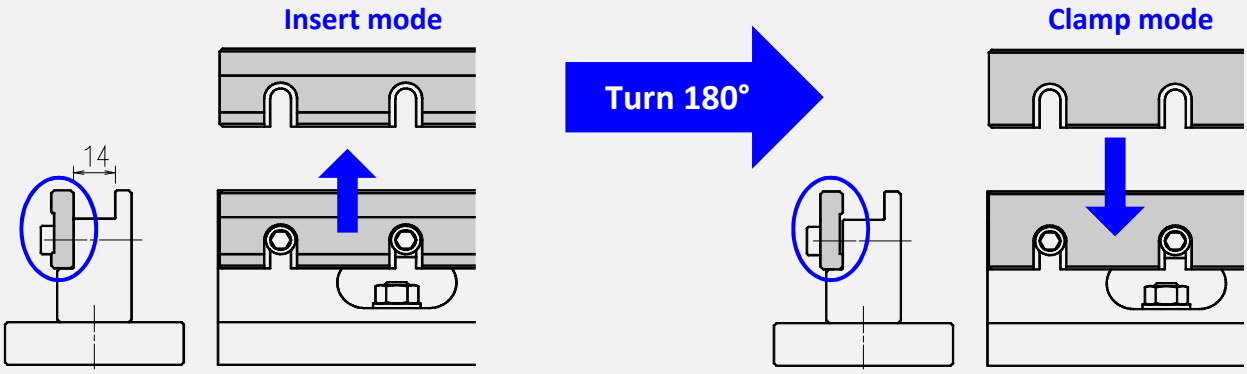

ED 0743251

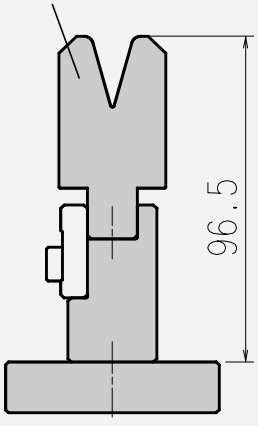

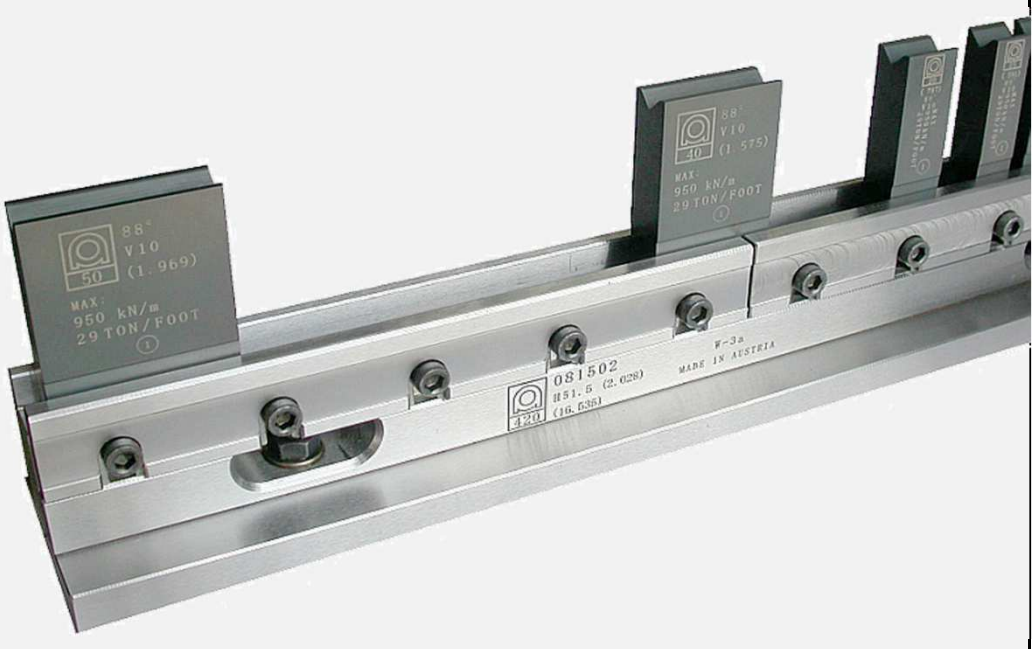

Die Holder FEAT

Length mm	Item No.	Weight Kg
L=850mm	DX 082501	13,5
S=510mm	DX 082502	8,0

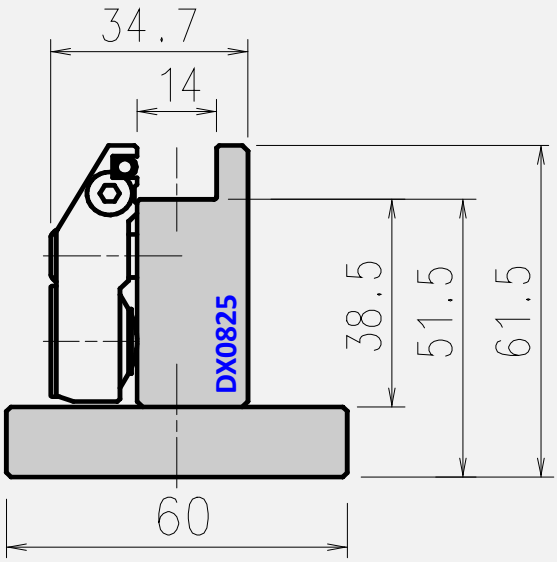

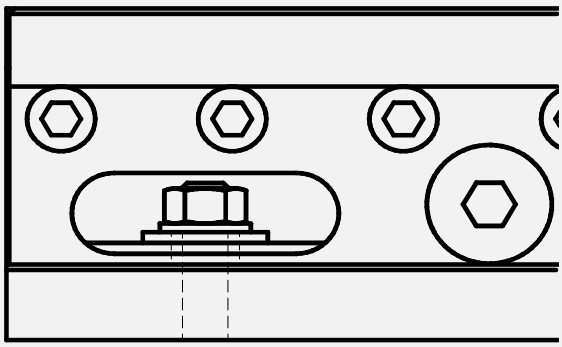

Die are clamped by rotating 5 bolts by 180°.

Clamping check for security: An indicator (red circle) appears in unclamping state.
(2 indicators per clamp plate)

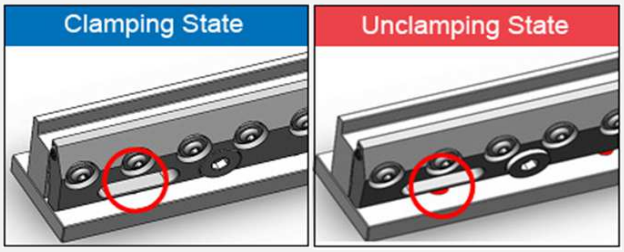

ED 0743251

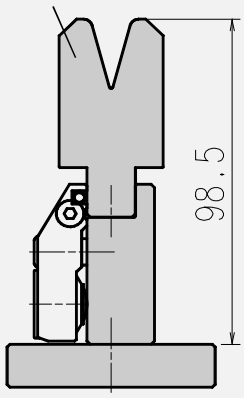

Die Holder 5340

Holder 5340 replaces old holder 534

Length mm	Item No.	Weight Kg
L=1050mm	EH 5340001	21,3
S=450mm	EH 5340002	9,2

All mounting hardware is included.

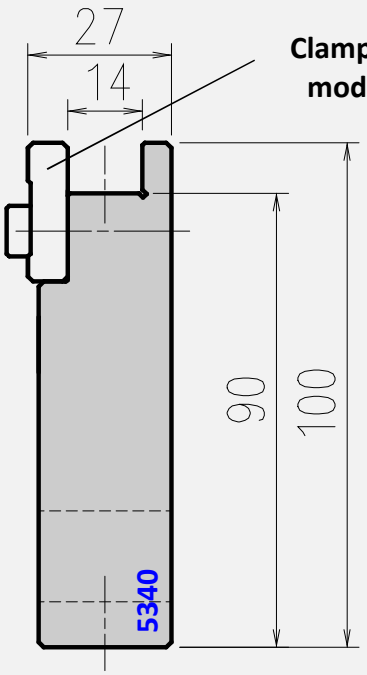

Clamp piece usable for insert mode and for clamp mode

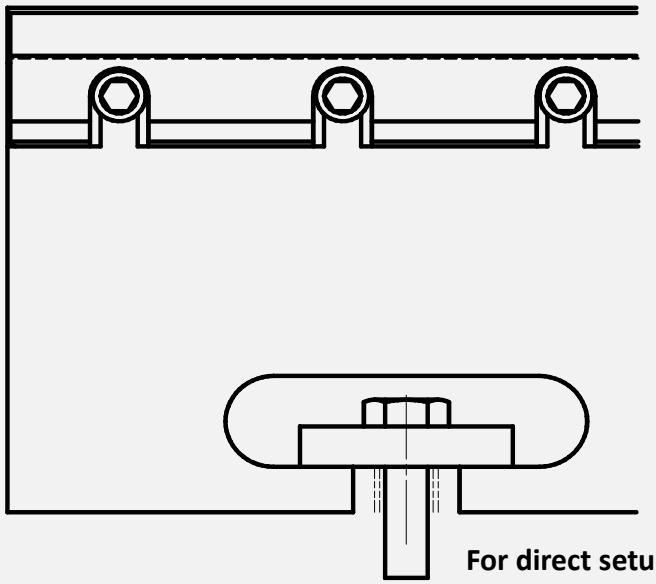

1000 kN/m

For direct setup on lower beam

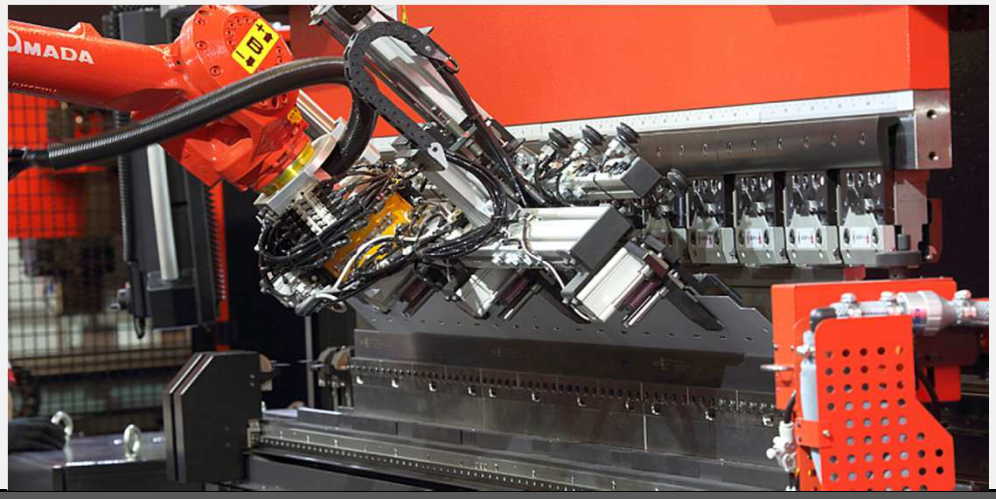

Support for Die Holder 5340

Setup for Die Holder 5340

All mounting hardware is included.

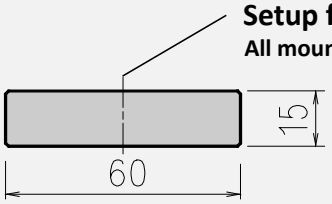

Length mm	Item No.	Weight Kg
L=1050mm	EH 5340011	7,4
S=450mm	EH 5340012	3,2

Die Holder 5330

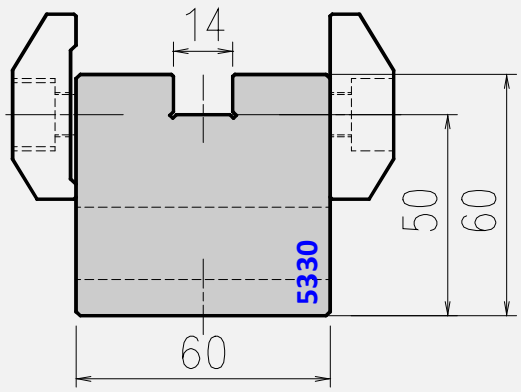

1000 kN/m

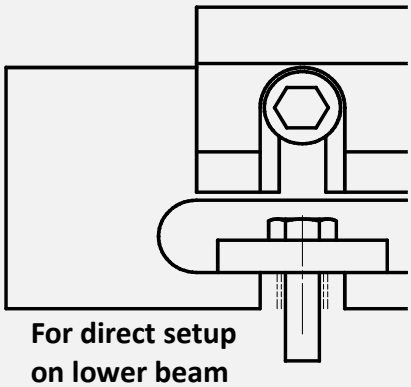

For direct setup on lower beam

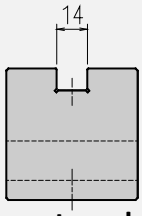

Insert mode

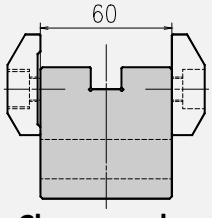

Clamp mode

Holder 5330 replaces old holder 533

Length mm	Item No.	Weight Kg
L=1050mm	EH 5330001	34,2
S=450mm	EH 5330002	14,6

All mounting hardware is included.

Insert adaptor for polycarbonate dies (V4 to V12)

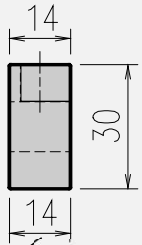

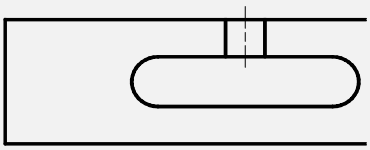

1000 kN/m

Dimension for insert mode

Length mm	Item No.	Weight Kg
L=834mm	EH 3300011	2,5
S=414mm	EH 3300012	1,2

All mounting hardware for polycarbonate dies is included.

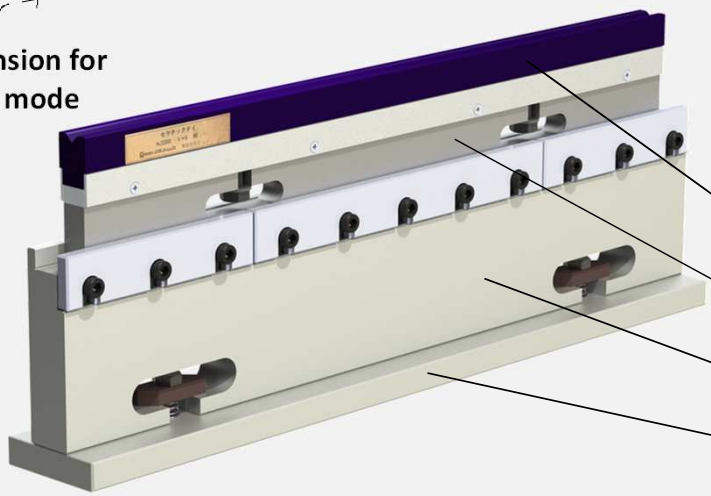

Polycarbonate Die DX 334002

Insert adaptor EH 3300012

Die Holder EH 5340002

Support for Die Holder EH 5340012

Die Holder 0550

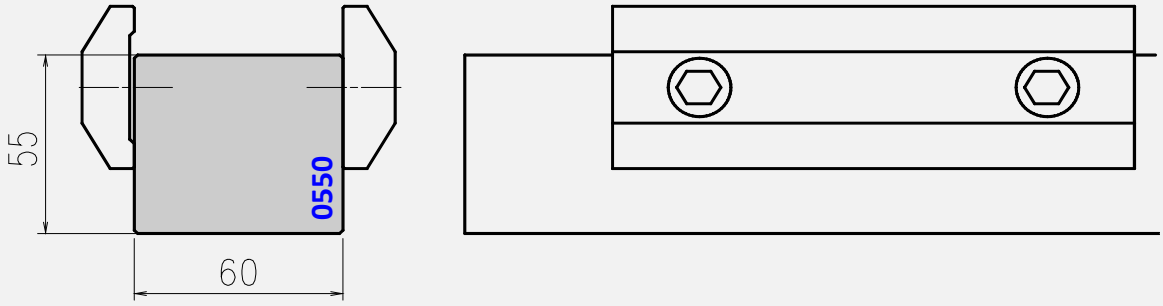

Holder 0550 replaces old holder 055

Length mm	Item No.	Weight Kg
L=835mm	EH 0550001	28,0
S=415mm	EH 0550002	14,0

Die Holder 0500

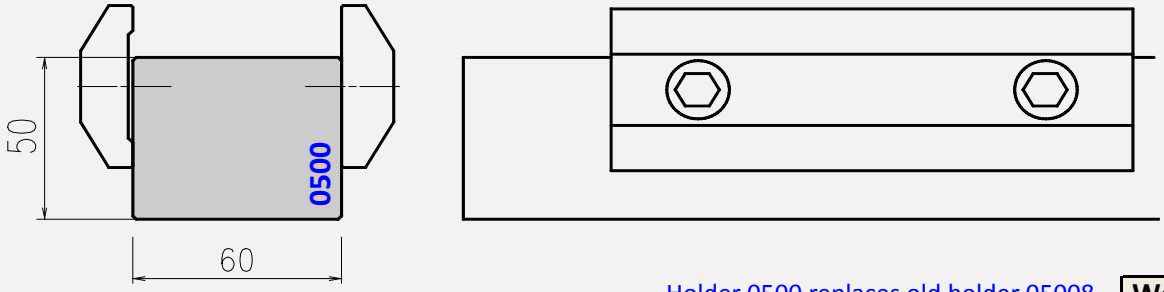

Holder 0500 replaces old holder 05008

Length mm	Item No.	Weight Kg
L=835mm	EH 0500001	26,0
S=415mm	EH 0500002	13,0

Die Holder for 2V reversible dies

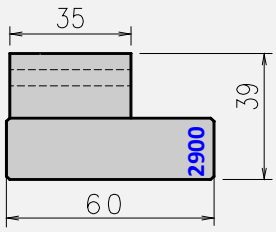

Holder 2900 replaces old holders 292 and 290

Length mm	H39 Item No.	Weight Kg
L=830mm	EH 2900001	10,8
S=412mm	EH 2900002	5,4

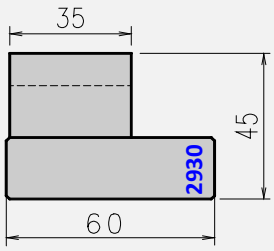

Holder 2930 replaces old holders 293

H45 Item No.	Weight Kg
EH 2930001	13,8
EH 2930002	6,9

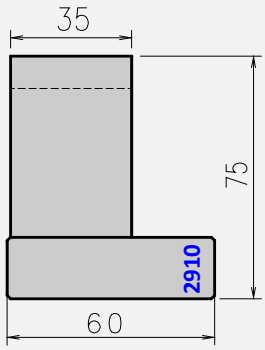

Holder 2910 replaces old holders 294 and 291

H75 Item No.	Weight Kg
EH 2910001	17,6
EH 2910002	8,8

Die Holder for 2V reversible dies

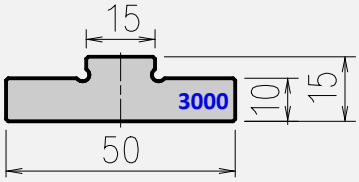

Holder 3000 replaces old rail 300

Length mm	Item No.	Weight Kg
L=835mm	EH 3000001	3,8
S=415mm	EH 3000002	1,9

Punch Holder SGRIP DUAL or SINGLE

DUAL

SINGLE

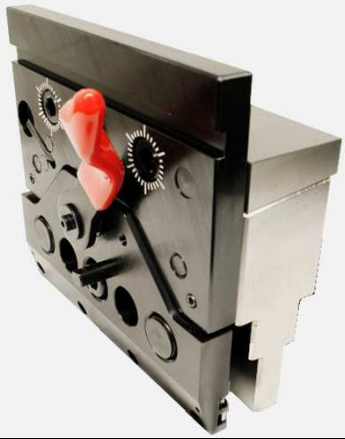

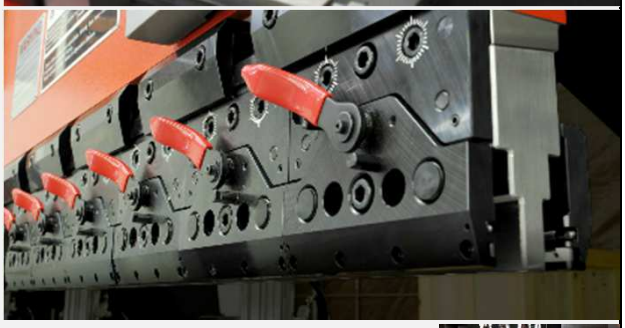

	Length mm	Item No.	Weight Kg
DUAL	150	DX 903200	7,5
SINGLE	150	DX 903100	6,3

Note:

- Tonnage: 1000 kN/m
- Effective Height: 120mm
- Front loading, unloading possible
- Adjustment wedge allows next to each other location

Punch Holder AGRIP-M DUAL

Length mm	Item No.	Weight Kg
150	DX 905200	7,5

Note:

- Tonnage: 1000 kN/m
- Effective Height: 120mm
- Front loading, unloading possible
- Adjustment wedge allows next to each other location
- Accurate clamping, positioning and alignment

Distance piece 100

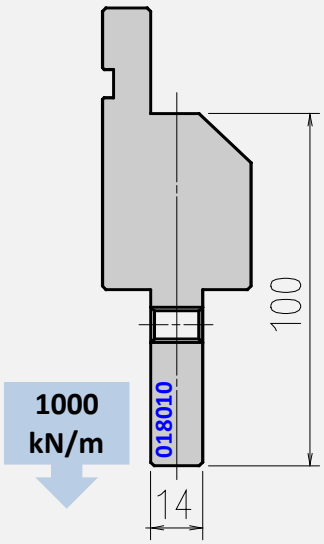

Holder 018010 replaces old ADA100

Length mm	Item No.	Weight Kg
150	EH 0180100	3,5

Distance piece 150

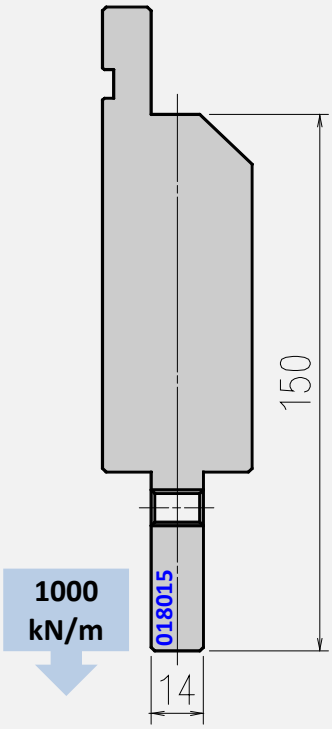

Holder 018015 replaces old ADA150

Item No.	Weight Kg
EH 0180150	5,9

Distance piece 200

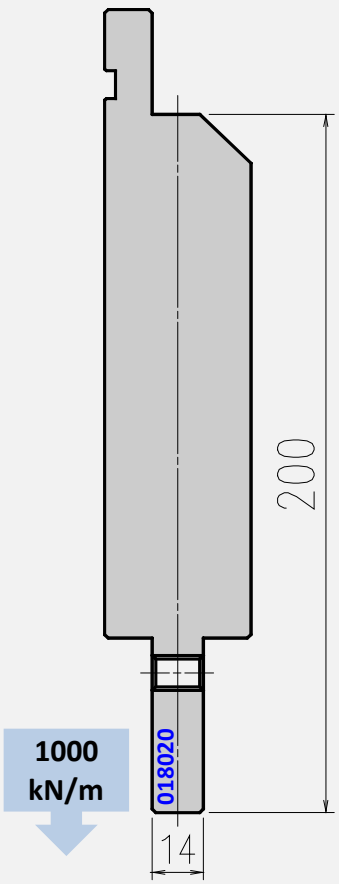

Holder 018020 replaces old ADA200

Item No.	Weight Kg
EH 0180200	8,5

Note: Clamps are not included.

Clamp plate Amaclip 980

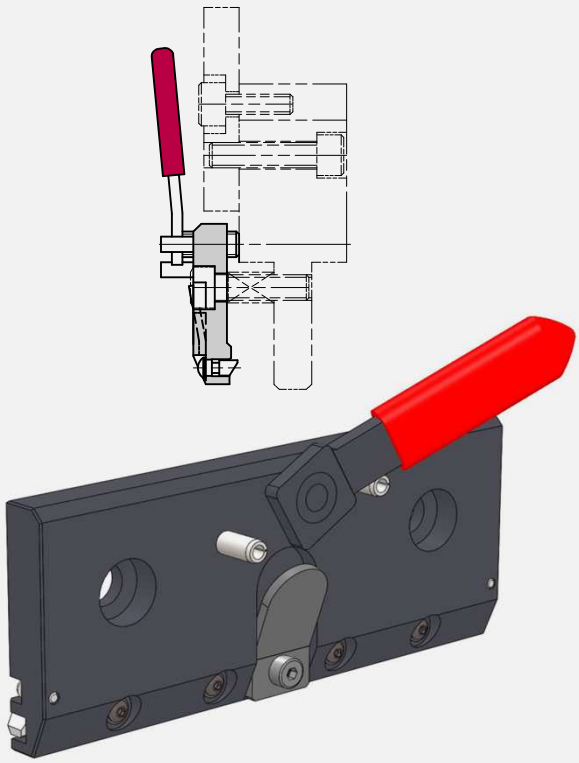

Note: Mounting hardware not included.

Length mm	Item No.	Weight Kg
150	AC 980000	0,9

Narrow Punch Holder 913

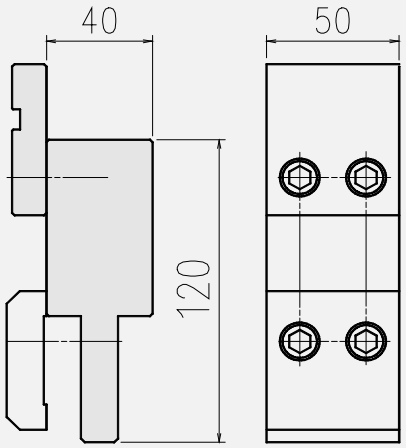

1000 kN/m

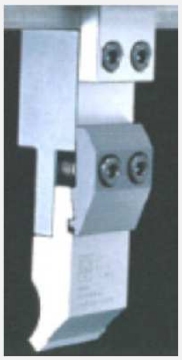

Length mm	Item No.	Weight Kg
50	AC 913000	3,0

Punch Holder 0150

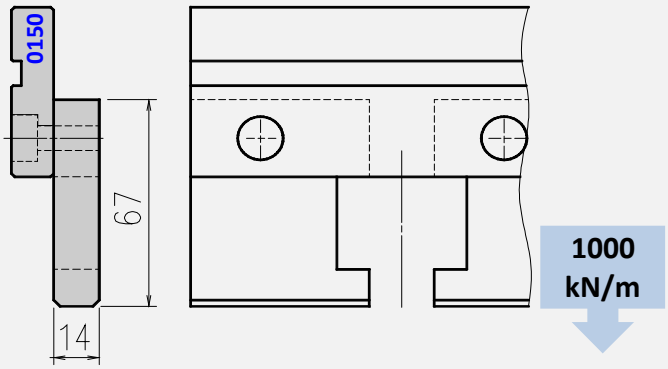

Holder 0150 replaces old holder 15

Length mm	Item No.	Weight Kg
830	EH 0150001	9,8
412	EH 0150002	4,9

Punch Holder 0160

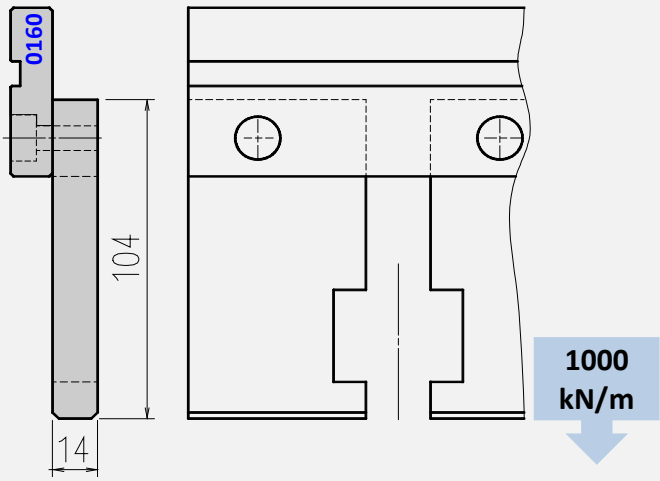

Length mm	Item No.	Weight Kg
830	EH 0160001	11,8
412	EH 0160002	5,9

Deep bend Punch Holder

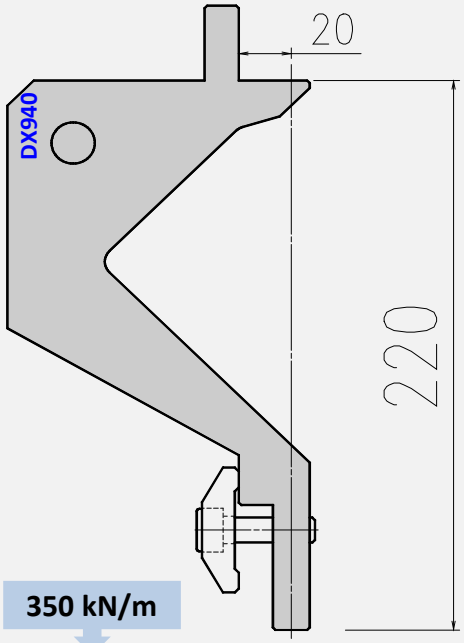

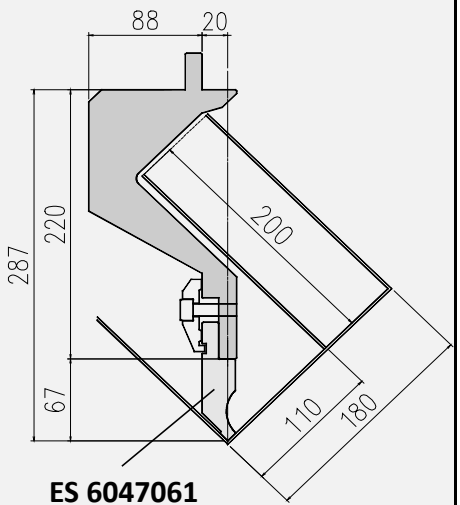

Length mm	Item No.	Weight Kg
200	DX 940000	18,0

Safety groove clamps available from stock : Item No. 961000

Super Multi II

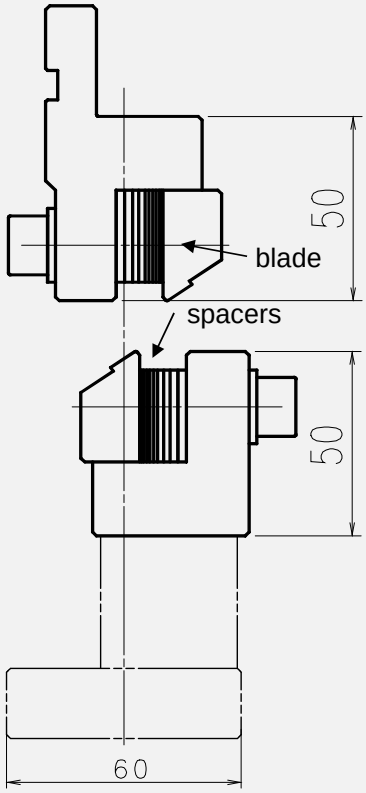

1000 kN/m

A variety of offset sizes in one tool !

Super multi tool-set is a versatile bending tool that achieves a variety of offset bendings by changing tooling offset in accordance with the spacer thickness.

- Sectionalized blade available
- Max. material thickness : 2,3 mm (mild steel)
  1,5 mm (stainless)
  3,0 mm (Al)
- Tool Offset range H_{tool} = 1,79 - 7,81 mm
- Due to the air bending method, product offset value is differing from tool offset, so please ask for charts.

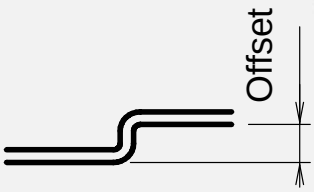

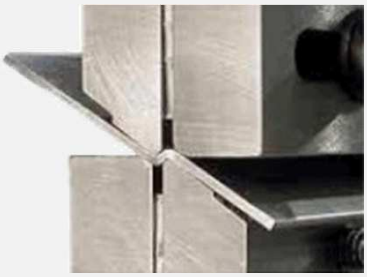

L-Set = 835 mm including all 835 mm spacers

S-Set = 415 mm including all 415 mm spacers

Length mm	Item No.	Wt. Kg
835	S20021	35,4
415	S20022	17,6

Replacement blades for Super Multi II

Blade 835 mm : S2B021

Blade 415 mm : S2B022

Sectional Blade 415 mm (10, 15, 20, 40, 50, 100, 180) : S2B802

Length mm	Item No.	Wt. Kg
835	S2B021	2,6
415	S2B022	1,3
415 sec.	S2B802	1,3

Alignement jig for Super Multi II

guarantee perfect alignment and finest adjustments in all planes (Set includes 2 pcs.)

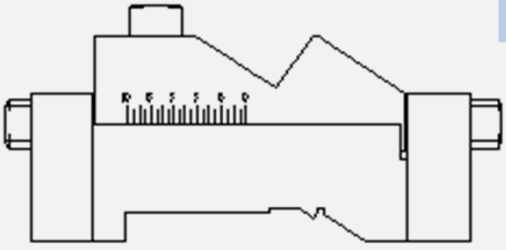

20 kN/m

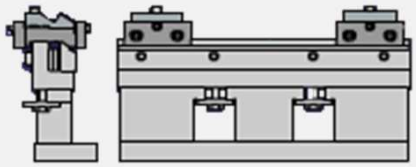

Item No.	Wt. Kg
S20030	3,0

90° Side gauge 930

Note:
- Max. 60 mm die width
- Left-gauging or right-gauging
- Fixation on die

Item No.	Weight [Kg]
AC 930000	2,0

90° Side gauge for 1V dies 939

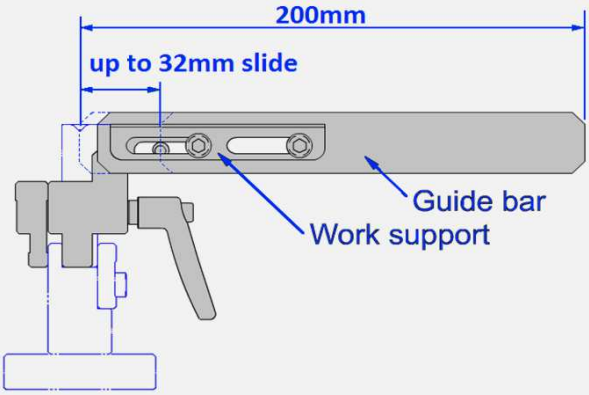

Note:
- Left-gauging or right-gauging
- Fixation on die holder

Item No.	Weight [Kg]
AC 939000	1,0

Angle adjustable side gauge 932

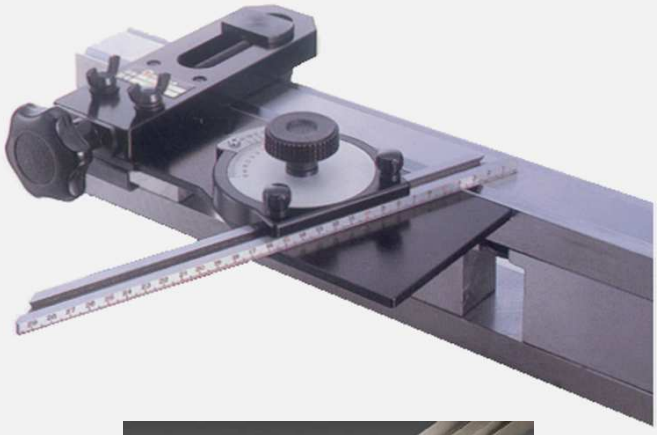

Note:
- Fixation on die (1V or 2V dies)
- Left-gauging or right-gauging
- Indexable within 100° (at 5' increments)

Item No.	Weight [Kg]
AC 932000	2,6

Digital angle gauge 9351

Note:
- Shows bending angle in real time
- Resolution of 0,1°
- Use only with magnetisable sheet metal

Item No.	Weight [Kg]
AC 935100	0,2

Closing tool

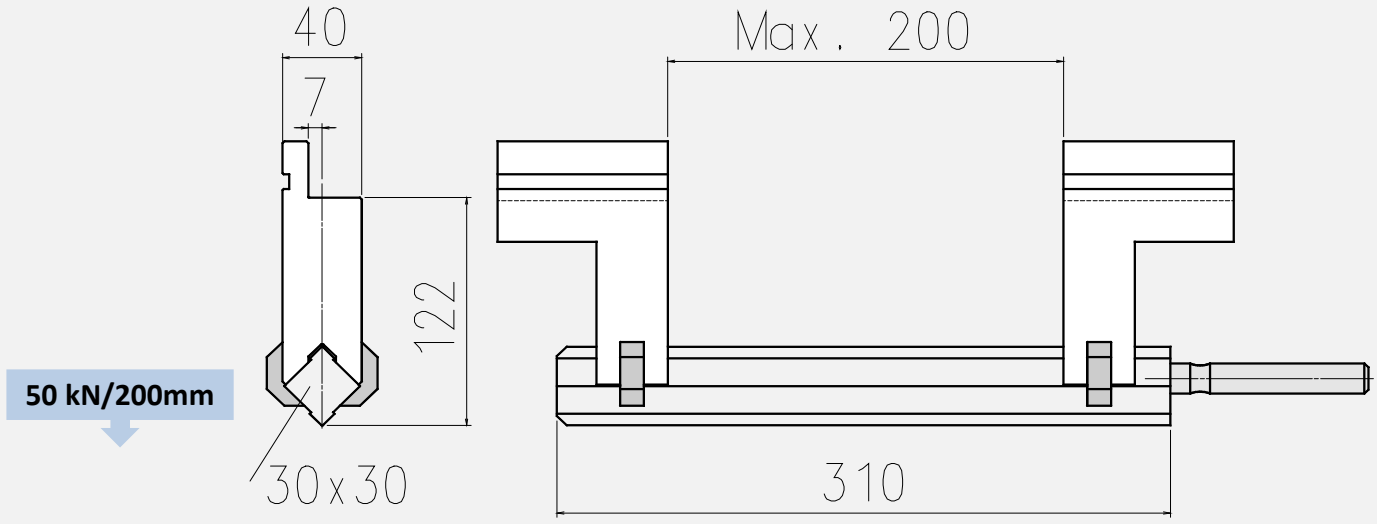

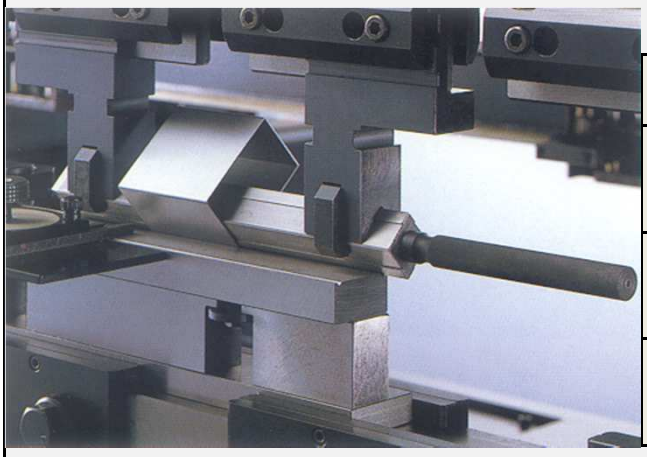

Guidance for thickness and V opening by tool gap:

Tool gap	Mild steel	Stainless steel	Aluminum
100mm	**t ≤ 4,5**	**t ≤ 2,5**	**t ≤ 5,0**
	≥ V40	≥ V25	≥ V32
150mm	**t ≤ 2,3**	**t ≤ 1,5**	**t ≤ 3,0**
	> V16	≥ V12	≥ V18
200mm	**t ≤ 1,6**	**t ≤ 0,8**	**t ≤ 2,0**
	> V10	≥ V6	≥ V10

Tool angle	Radius mm	Item No.	Weight Kg
88°	**R0,6**	C00010	6,0

Note:
- Please minimize tool gap, according to sheet part

"BendingTool"

The bending app by Amada

Using BendingTool you can quickly calculate on the spot:
- **Press force**
- **Press force table**
- **Bend deduction**
- **Sheet gauge conversion**
- **Weight of sheet**
- **Box bending parameters**
- **Return bend graphs**

The BendingTool is available free for iOS in the app store.

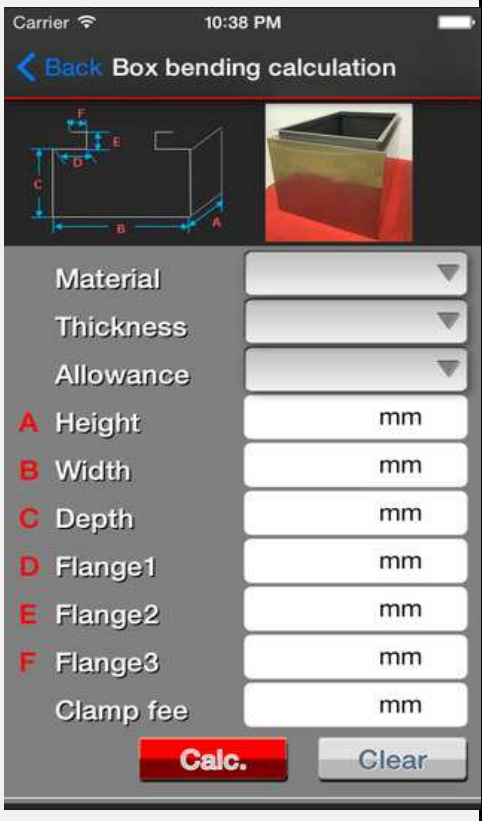

Type VLMBN

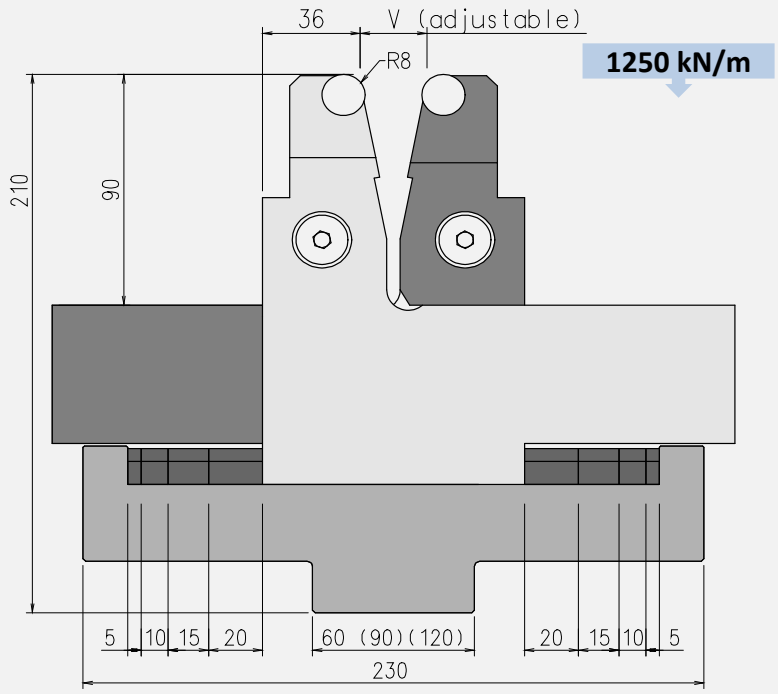

Minimum die angle	30°
V-Opening	adjust. each 10mm
	ca. V25 - V125
Sheet thickness	3 - 15 mm
Shoulder Radius	R8 mm
Die length	500 mm
Max. allowable tonnage	1250 kN/m
Hardness Radius inserts	HRC 60
Spacers:	5; 10 ; 15; 20

	for 60mm beam		for 90mm beam		for 120mm beam	
	Item No.	Weight Kg	Item No.	Weight Kg	Item No.	Weight Kg
Set	BN1-500S	96	BN2-500S	99	BN3-500S	99
only Holder	BN1-500H	33	BN2-500H	36	BN3-500H	36

	Item No.	Weight Kg
only Die	BN 500D	58
only spacers	BN-500I	5,3
only strip	ACBN150	0,1

Type VLMDN

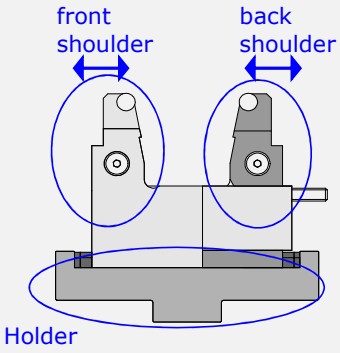

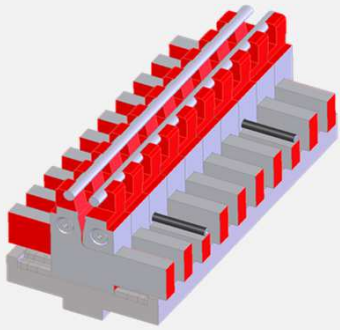

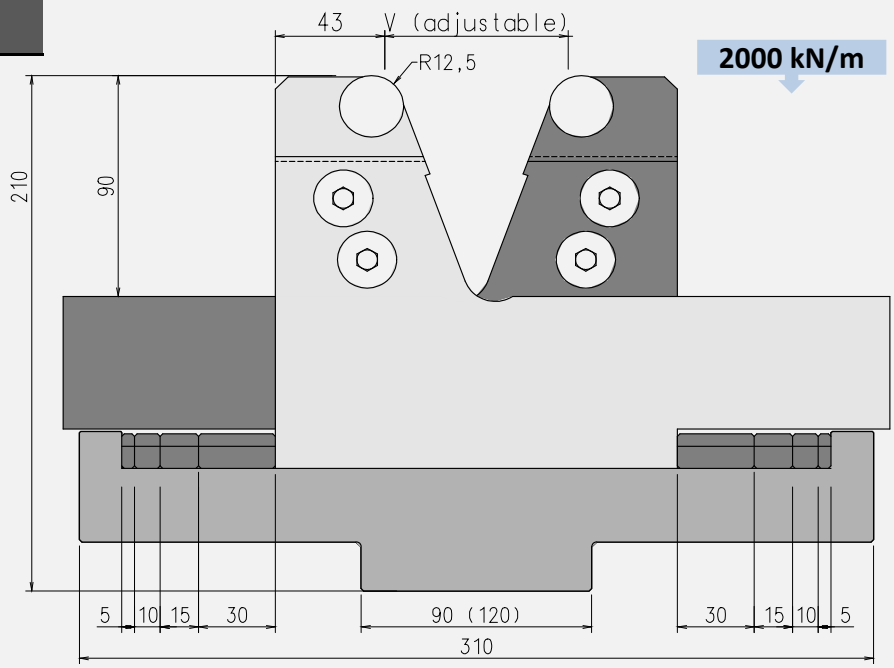

Minimum die angle	60°
V-Opening	adjust. each 10mm
	ca. V70 - V190
Sheet thickness	3 - 20 mm
Shoulder Radius	R12,5 mm
Die length	500 mm
Max. allowable tonnage	2000 kN/m
Hardness Radius inserts	HRC 60
Spacers:	5; 10; 15; 30

	for 90mm beam		for 120mm beam	
	Item No.	Weight Kg	Item No.	Weight Kg
Set	DN2-500S	137,1	DN3-500S	44,6
only Holder	DN2-500H	44,6	DN3-500H	44,6

	Item No.	Weight Kg
only Die	DN 500D	86
only spacers	DN-500I	6,4
only strip	ACDN150	0,1

WingBend
bending features

- very small flanges
- wide range of materials using the same die
- small bend radii
- bends closer to holes
- forming oblique flanges
- less scratches
- scratch-free bending for film protected sheet metal

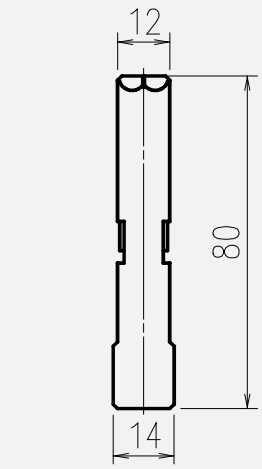

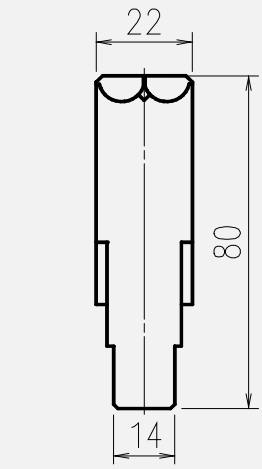

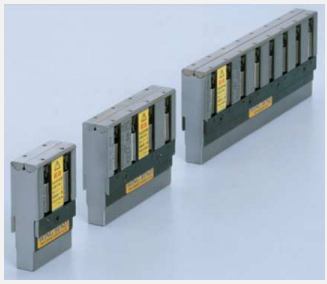

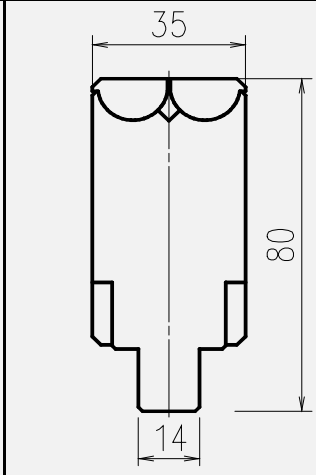

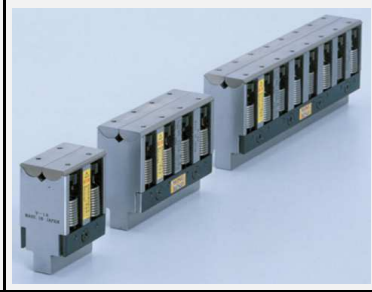

		WB120-A	WB230-A	WB350-A
Equivalent die opening		**up to V6**	**up to V10**	**up to V15**
Mat. thickness	Mild steel	0,5 ~ 1,2	0,5 ~ 2,3	1,0 ~ 3,2
	Stainless steel	0,5 ~ 1,0	0,5 ~ 2,0	1,0 ~ 3,0
	Aluminium	0,5 ~ 1,0	0,5 ~ 2,0	1,0 ~ 3,0
Min. angle		80°	80°	80°
Tonnage		1000 kN/m	1000 kN/m	1000 kN/m
Code per tool length	50mm	70120A	70230A	70350A
	100mm	70120B	70230B	70350B
	200mm	70120C	70230C	70350C

Tonnage and process data:

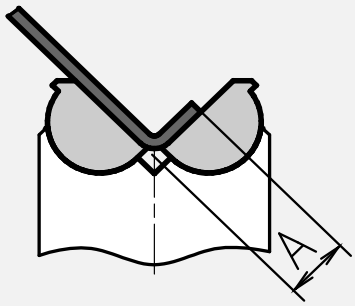

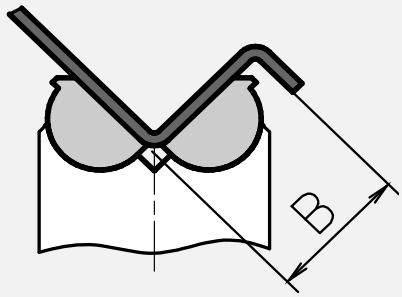

How to read table data:

Tonnage (kN/m)			
A	**Min. flange length (mm)**	**B**	**Min. offset value (mm)**

t (mm)	WB120-A		WB230-A		WB350-A	
0,5	50		50		40	
	3,6	7,3	5,7	12,2	8,1	19,3
0,8	100		70		50	
	3,8	7,4	5,9	12,4	8,4	19,5
1	150		80		60	
	4,0	7,4	6,1	12,6	8,6	19,7
1,2	240		110		70	
	4,1	7,5	6,2	12,7	8,8	19,9
1,6			200		140	
			6,4	12,9	9,0	20,2
2			300		200	
			6,6	13,0	9,4	20,4
2,3			400		260	
			6,8	13,2	9,6	20,6
2,6					340	
					9,8	20,8
3,2					510	
					10,2	21,0

Note:
- this chart is showing bending data for mild steel
- bending operation in the dark range is not recommended
- Min. flange length and min. offset value are reference values

Large-radius bending

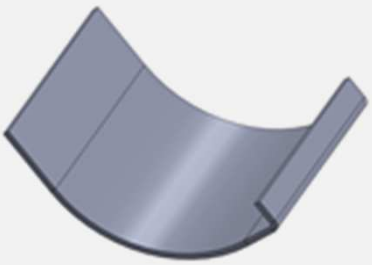

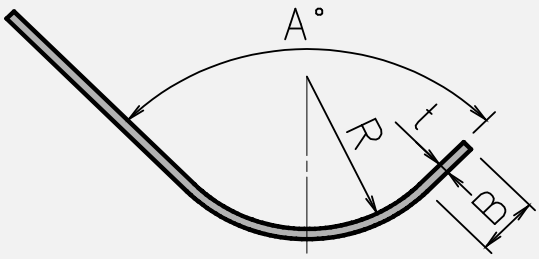

Note:
- please check the option to use step-bending process
- for mild steel (3t<R<30t), R value will vary around ±5%
- for R≥30t less accuracy should be considered
- for B<10t air bending is not recommended

Using air-bending tools

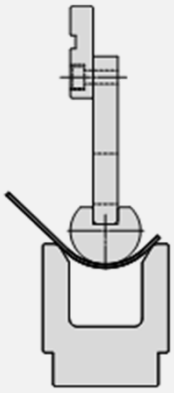

Using counterpressure

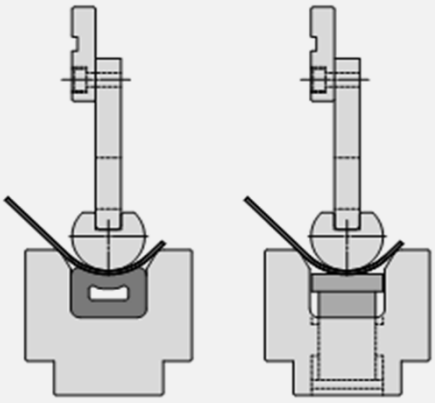

Using coining tools

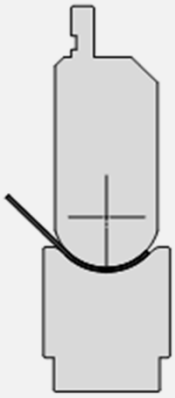

Offset bending

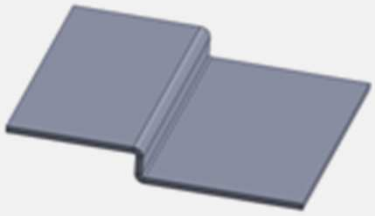

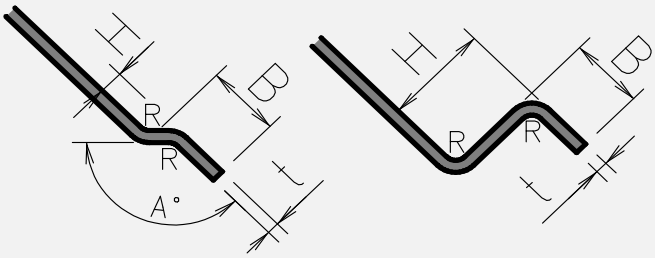

Note:
- please check the option to use standard offset tools
- best results for R≈0,3H; B=1,4H+5mm; H<12mm (mild steel)
- H results will vary around ±0,2mm
- for H<2,8t less accuracy

Hat bending

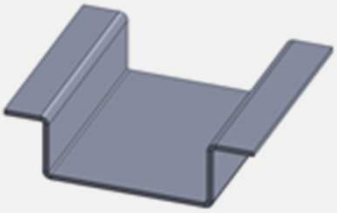

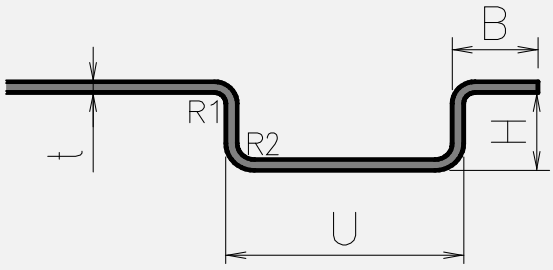

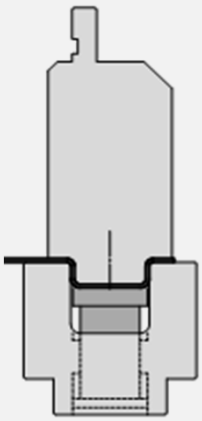

Note:
- best results for R1≈ t; R2≈ 2t; H≈(5t bis 15mm) U≈(4t bis 30mm)
- H and U results will vary around ±0,2mm
- for B<10t less accuracy

U bending

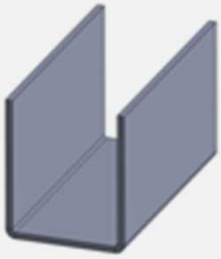

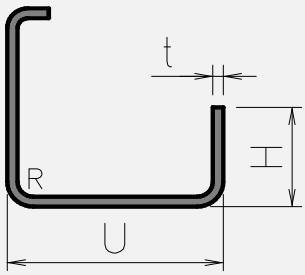

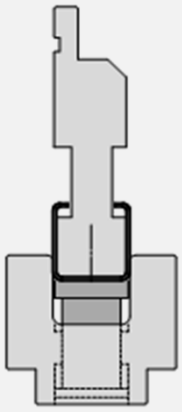

Notes:
- best results for R ≈ t; U≈(4t bis 30mm)
- U results will vary around ±0,2mm
- top side of the U shape could slightly open

Beading (longitudinal to the bending line)

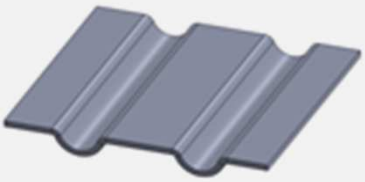

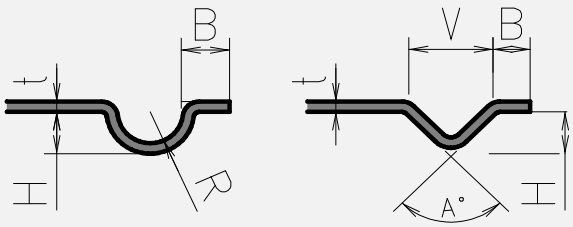

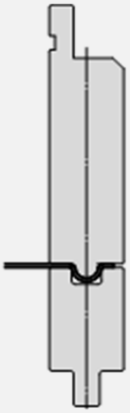

Note:
- best results for R≈(3t bis 10mm);
  V≈(4t bis 30mm) and A> 60° (mild steel)
- H results will vary around ±0,2mm
- for B<10t less accuracy

Beading (transversal to the bending line)

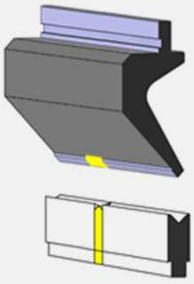

Needed data:

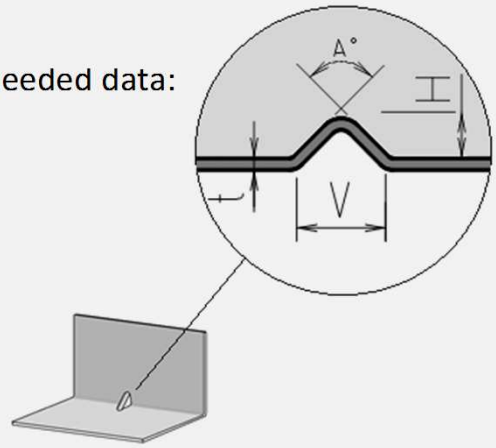

Flattening

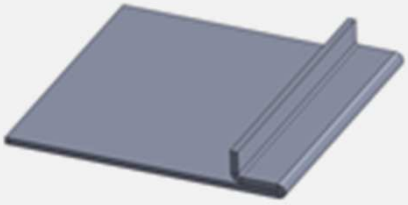

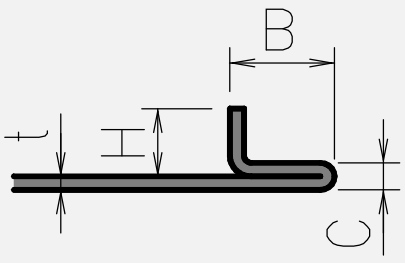

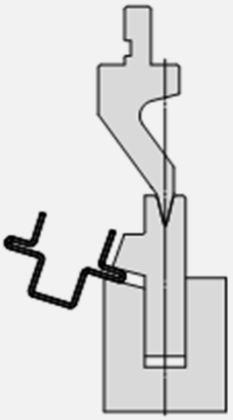

Note:
- for C=2t high bending force is required
- for more complex parts double-deck type tools are not possible
- higher flange of H > B could cause tonnage problems

Determination of customized bending sequences

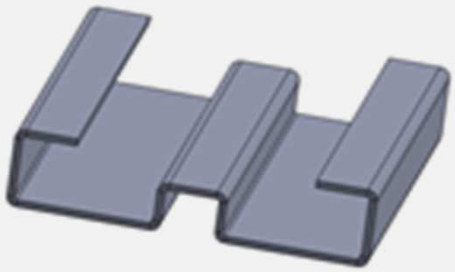

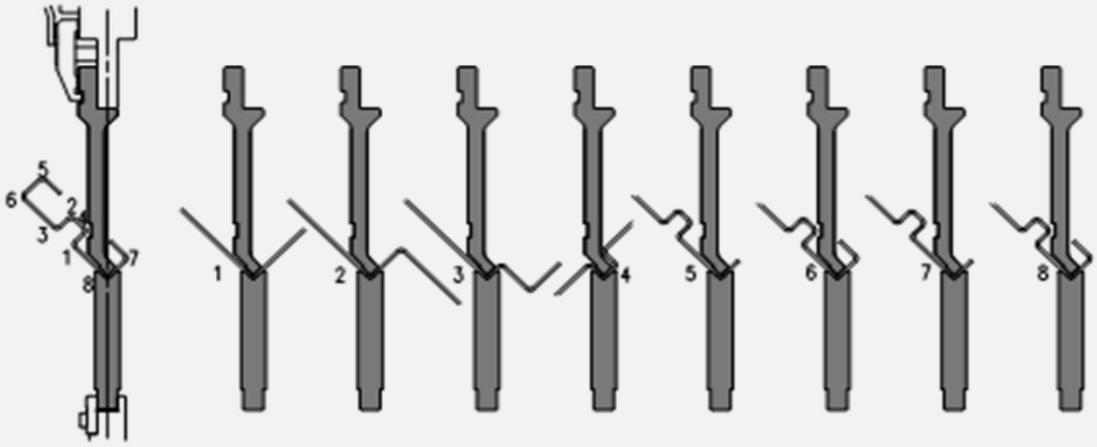

Conversion Adaptors

Amada offers adapting solutions for press brakes with Non-Amada style tooling. The advantage of these adaptors is the short and adjustable height in order to optimize open height of the press brake. For an offer, all Non-Amada dimensions are needed.

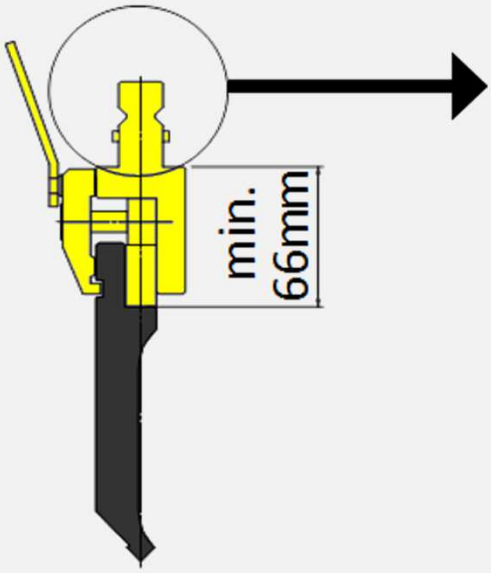

Height-adjustable adaptor for punches:

From NON-AMADA system
(Beyeler, LVD, Wila, ...**)**
to AMADA

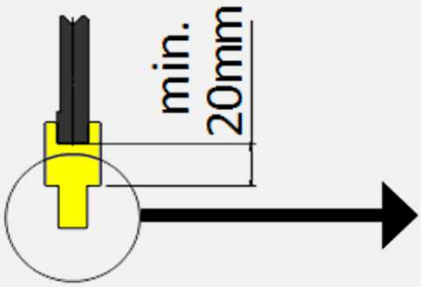

Adaptor for Dies:

From NON-AMADA system
(Beyeler, LVD, Wila, ...**)**
to AMADA (Insert, Reversible, Direct)

Tooling profile change for punches

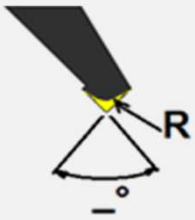

Modifications of the tool parameters
due to "throughhardened" quality, Amada tools have same hardness after modification (heat treatment is not necessary)

-Angle modifications (for sprinback compensations)
-Tip radius modifications
-Regrinding and repairing
-Modifications of the length or special section widths
-Special coatings against galling and special marking on request

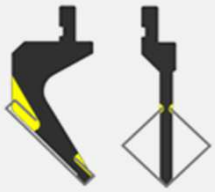

Modifications according to the shape of the sheet metal part

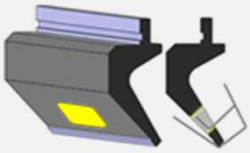

Modifications of the punch body for closed bending

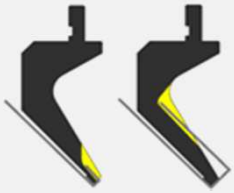

Due to highest strenght of the body, Amada tools can be modified much thinner than conventional tools

-Modifications for very thin U-shaped sheet metal parts
-Modifications for very close C-shaped sheet metal parts

Modifications of the ear tool (length and profile)

Rulers with special radii

Tooling profile change for dies

Modifications of the tool parameters

-Angle modifications (for sprinback compensations)
-Shoulder radius modifications (for less marks)
-Regrinding and repairing
-Modifications of the length or special section widths
-Special coatings against galling and special marking on request

Modifications according to the shape of the sheet metal part

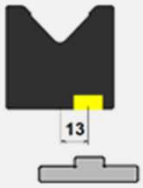

Adaptions for the reversible system

Adaptions for the insert system

If material thickness t is known the recommended V opening can be selected using following formulas:

t	(0...3) mm	(3...8) mm	(8...12) mm	12mm or more
V	6 t	8 t	10 t	12 t

Considering t, V and tensile strength Rm [N/mm²] of sheet material, the table below shows the most important bending data:

1. **Minimum bendable flange length bmin**
2. **Bending radius ir on the sheet metal**
3. **Pressure F in KN required for 1 metre bending length.**

The tables are for mild and stainless steel. For other type of materials, please use the mild steel table with multiplier k=Rm/450

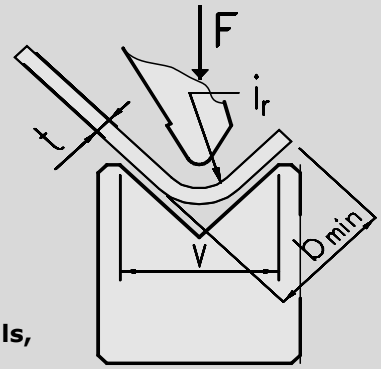

V	4	6	7	8	10	12	14	16	18	20	25	32	40	50	63	80	100	125	160	200	250
bmin	2,8	4	5	5,5	7	8,5	10	11	13,5	14	17,5	22	28	35	45	55	71	89	113	140	175
ir	0,7	1	1,1	1,3	1,6	2	2,3	2,6	3	3,3	4	5	6,5	8	10	13	16	20	26	33	41

t — for mild steel Rm≈450 N/mm²

t																					
0,5		40	30																		
0,6		60	40	40	40																
0,8			70	70	50	40															
1,0			110	100	80	70	60														
1,2				140	120	100	80	70	60												
1,4					150	130	110	100	90	80											
1,5					170	150	130	110	90	80											
1,6						170	150	130	110	100	90										
2,0							220	190	170	150	130	110									
2,3								250	230	190	170	150	120								
2,6								280	250	220	180	140									
3,0									340	300	240	190	150								
3,2										340	270	220	170	140							
3,5											330	260	200	160	130						
4											430	340	270	210	170						
4,5												440	340	270	210						
5												520	420	330	260	210					
6													600	480	380	300	240				
7															520	410	330	260			
9																670	540	430			
10																850	670	530	420		
12																	960	780	600	550	
16																		1360	1070	860	
19																			1500	1250	1000
22																				1600	1300
25																				2100	1700
30																					2400

t — for stainless steel Rm≈700 N/mm²

t																					
0,5		60	50																		
0,6		90	60	60	60																
0,7		120	80	80	60	60															
0,8			110	110	80	70															
0,9			130	120	100	80	70														
1,0			170	150	120	110	80														
1,2				210	180	150	120	110	90												
1,5							200	170	150	130	120										
2,0							330	290	260	230	200	170									
2,5									390	350	300	250	190								
3										510	450	360	290	230							
4												650	510	410	320	260					
5													780	630	500	390	320				
6														900	720	570	450	360			
8																1020	810	650	510		
10																	1280	1010	800	630	
12																		1440	1170	900	830
15																			1800	1410	1140
20																				2500	2080	1670
25																					3150	2550
30																						3600

RETURN BEND LIMIT GRAPH

PUNCH 804

Back to index

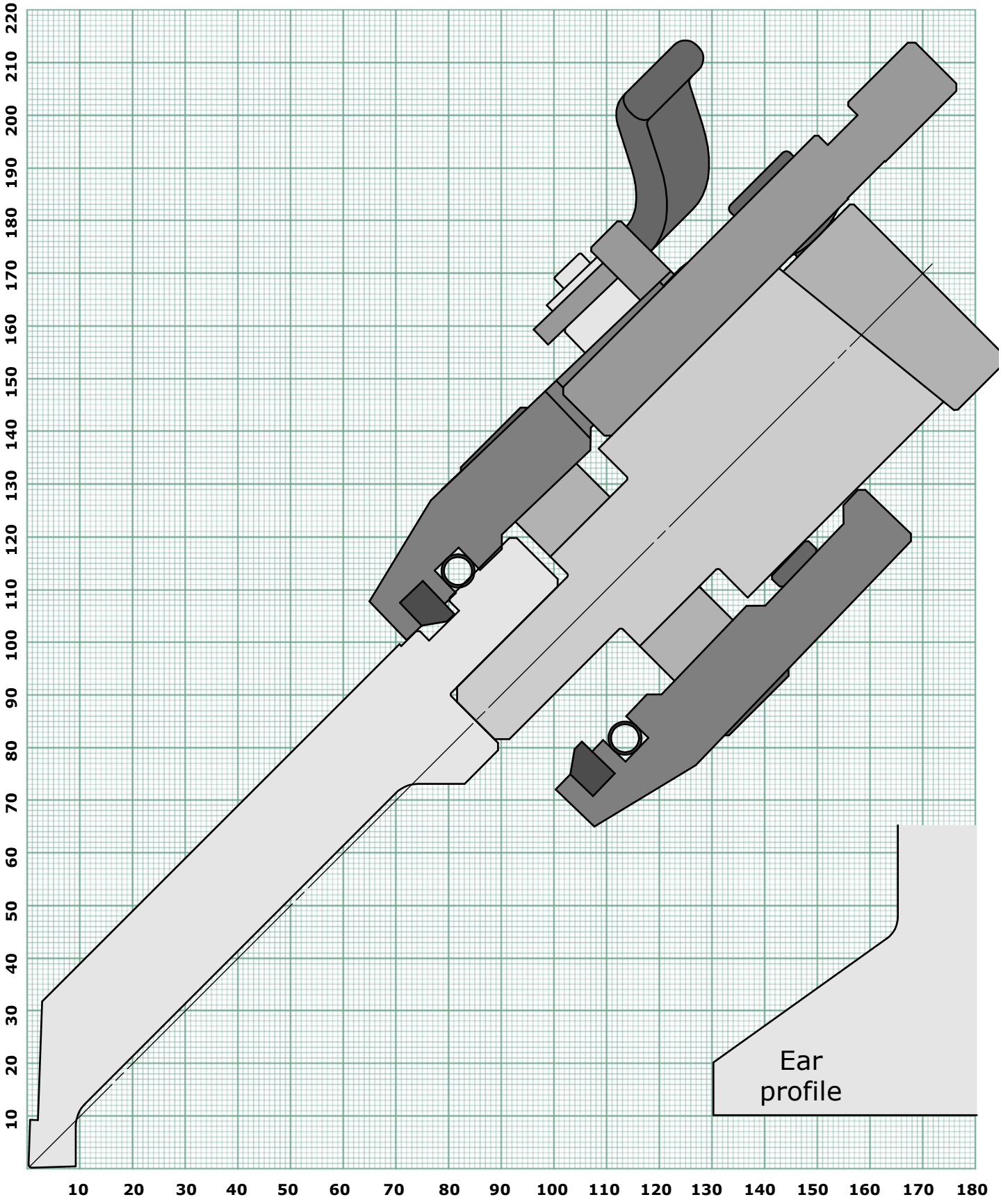

RETURN BEND LIMIT GRAPH

PUNCH 847

Back to index

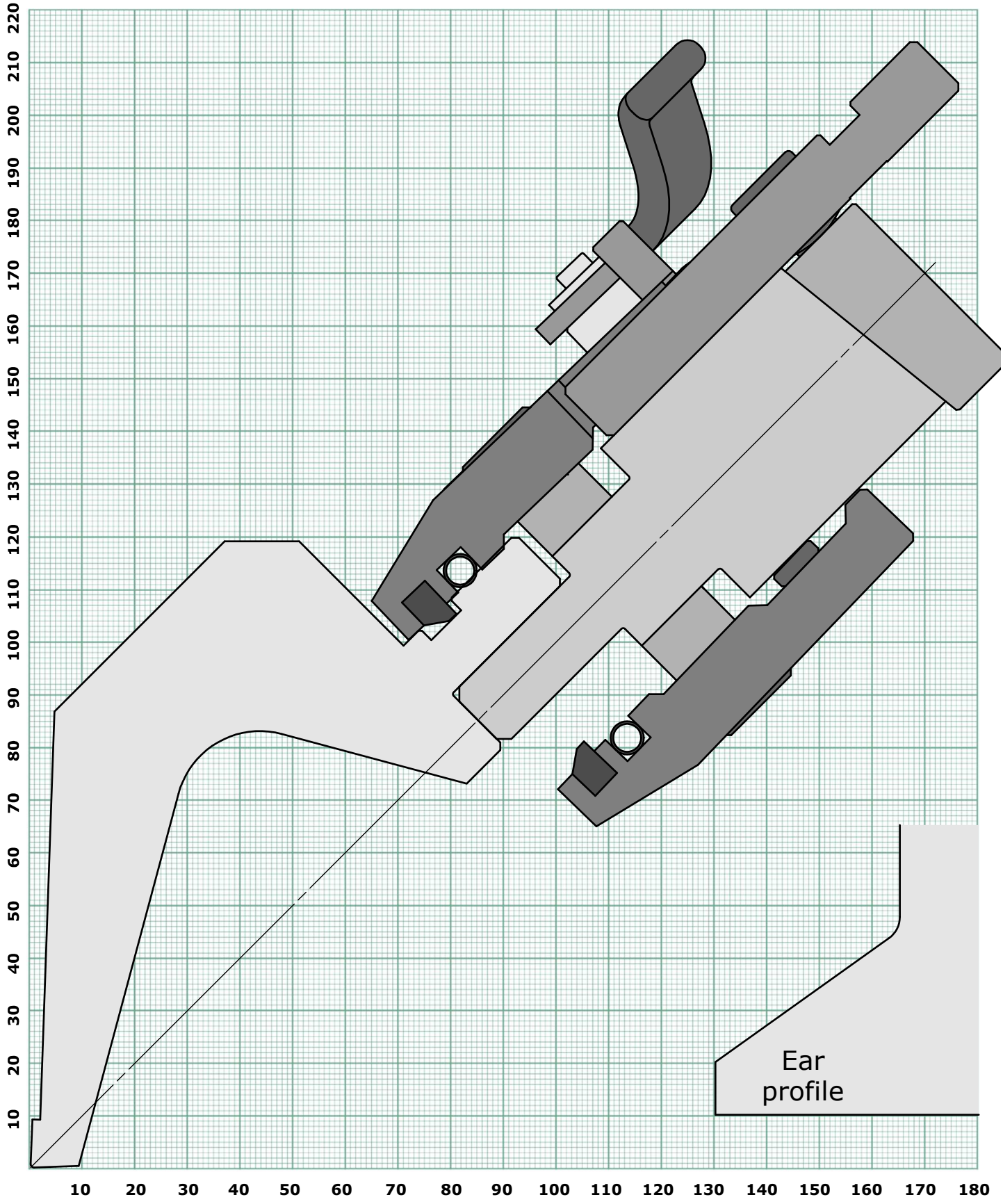

RETURN BEND LIMIT GRAPH

PUNCH 820

Back to index

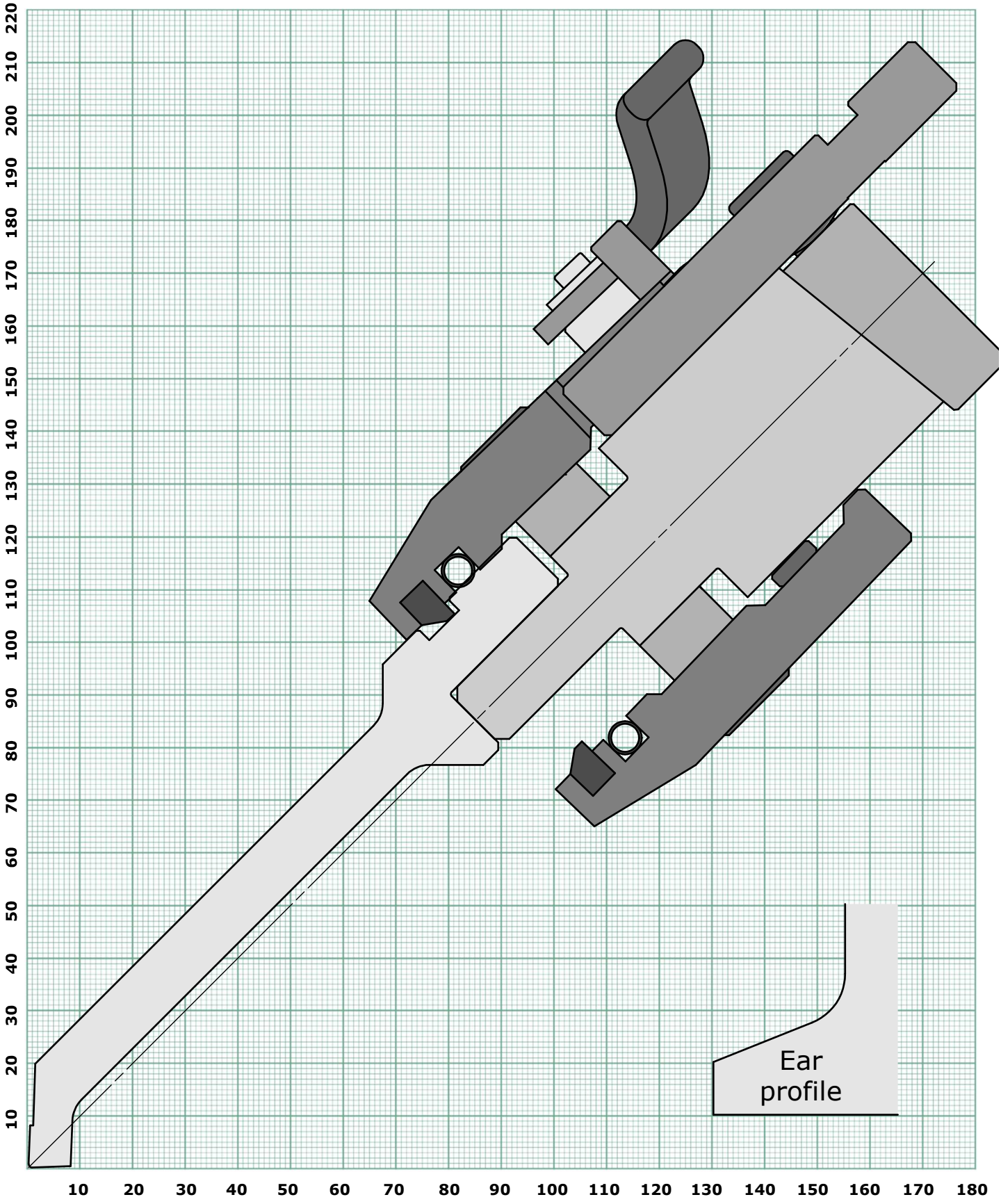

RETURN BEND LIMIT GRAPH

PUNCH 817

Back to index

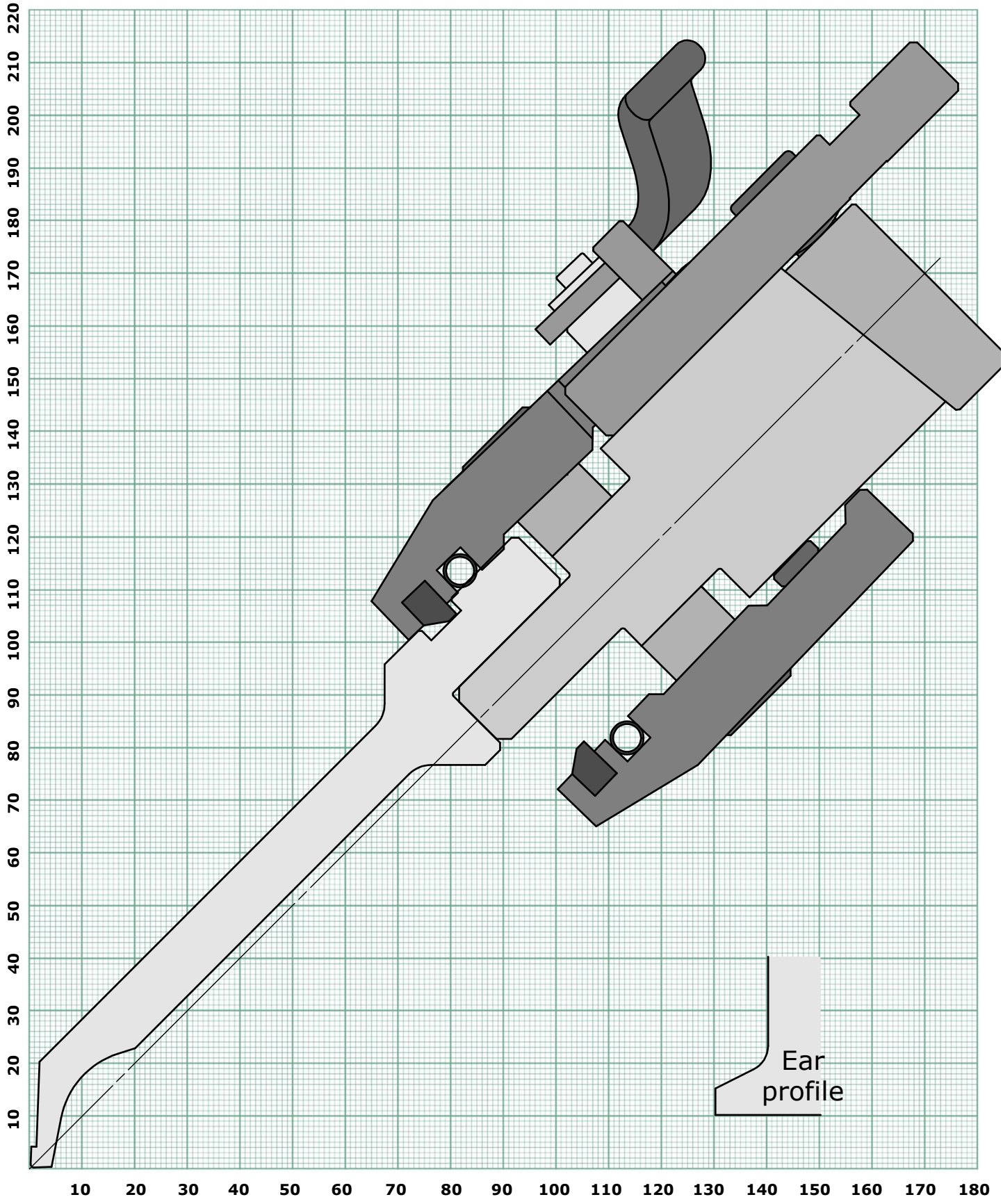

RETURN BEND LIMIT GRAPH

PUNCH 846

Back to index

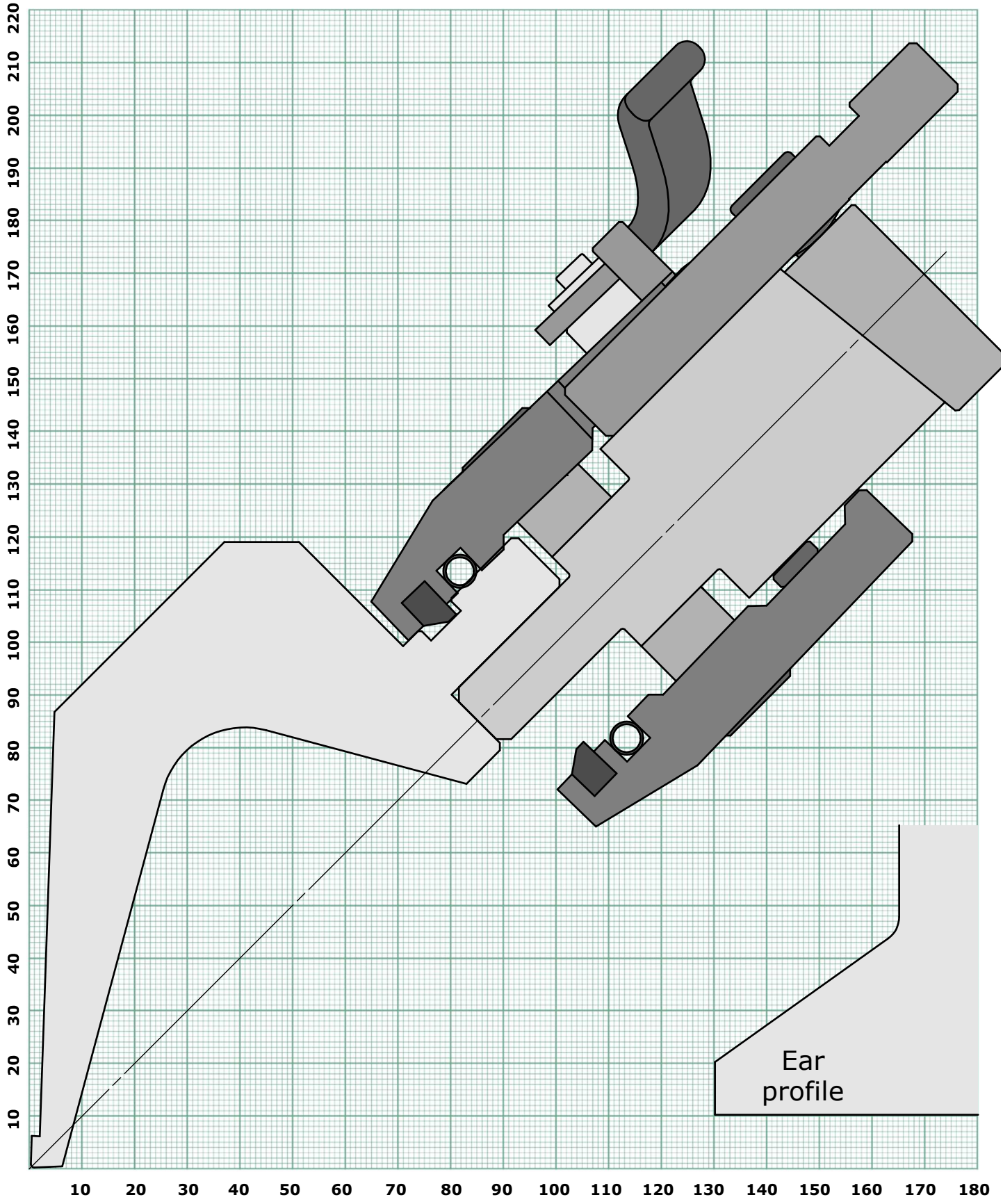

RETURN BEND LIMIT GRAPH

PUNCH 840

Back to index

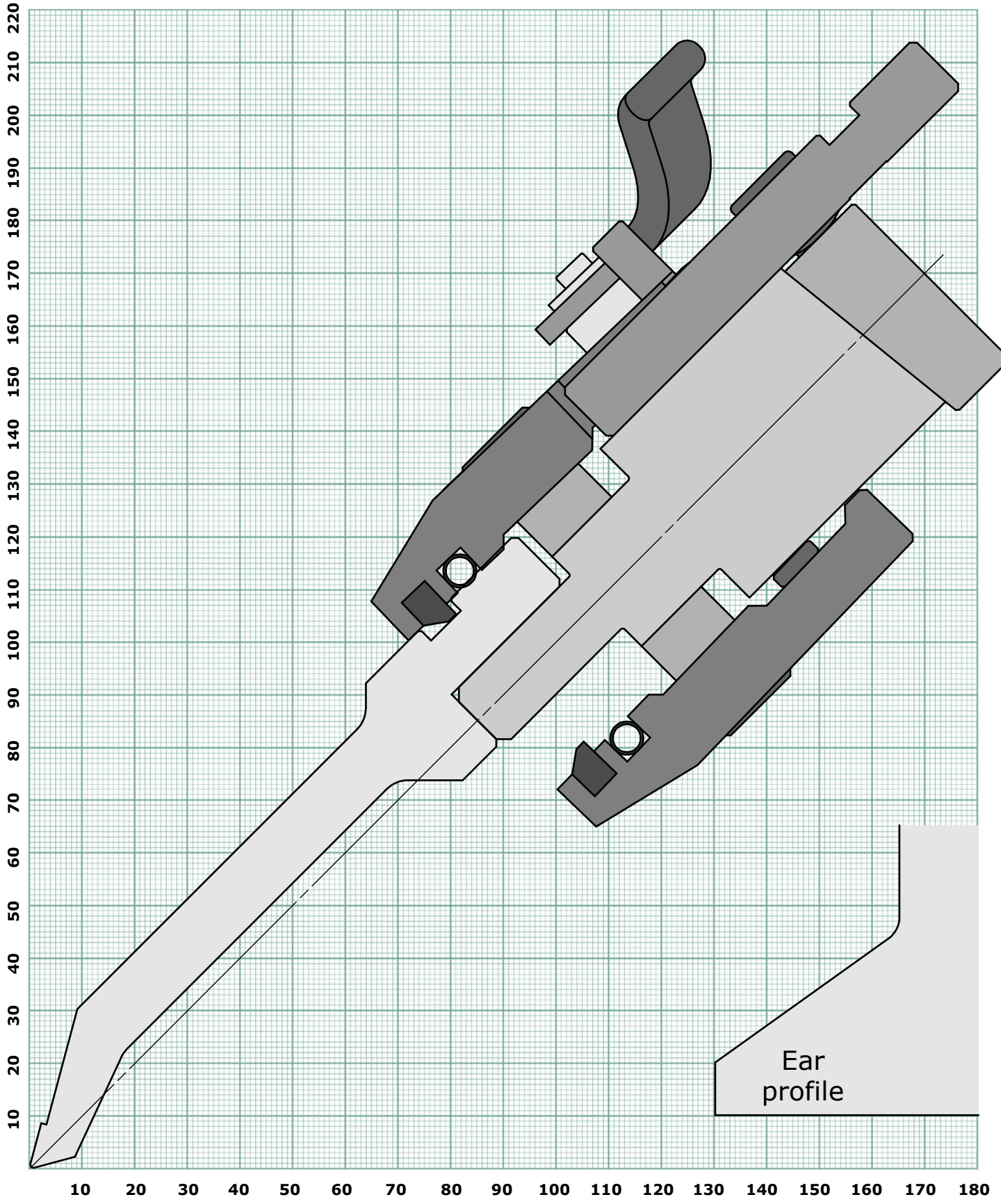

RETURN BEND LIMIT GRAPH

PUNCH 841

Back to index

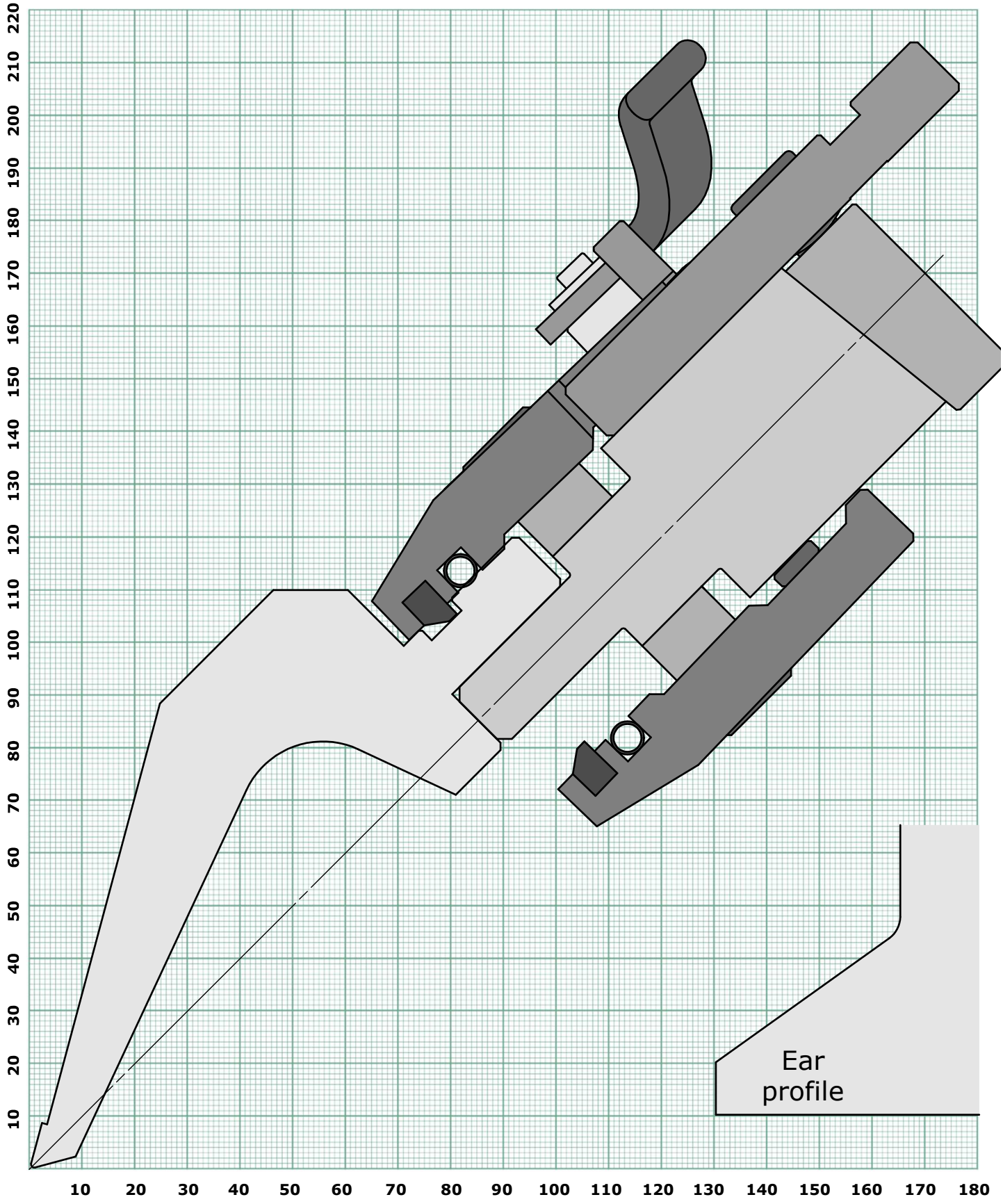

RETURN BEND LIMIT GRAPH

PUNCH 814

Back to index

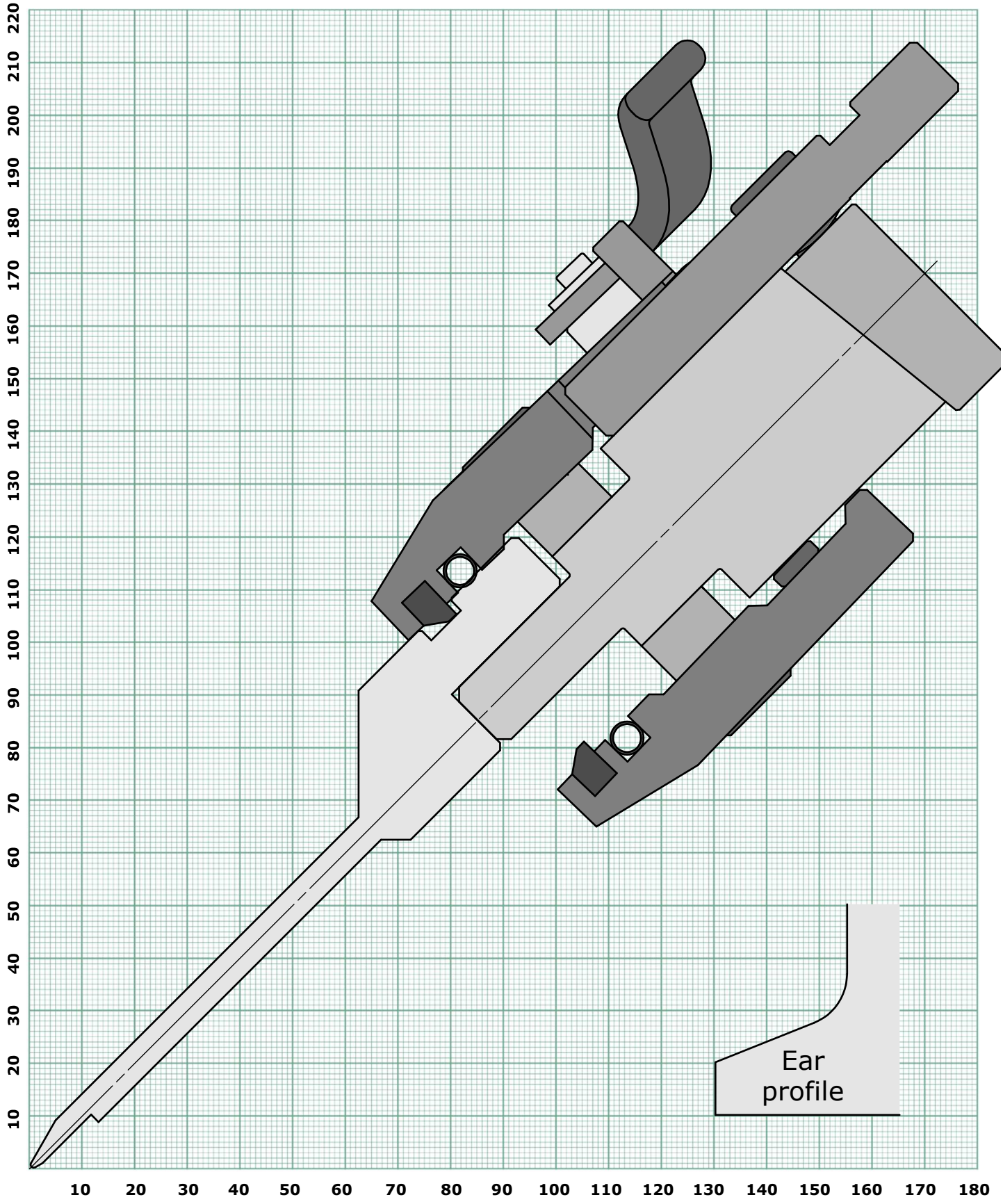

RETURN BEND LIMIT GRAPH

PUNCH 831

Back to index

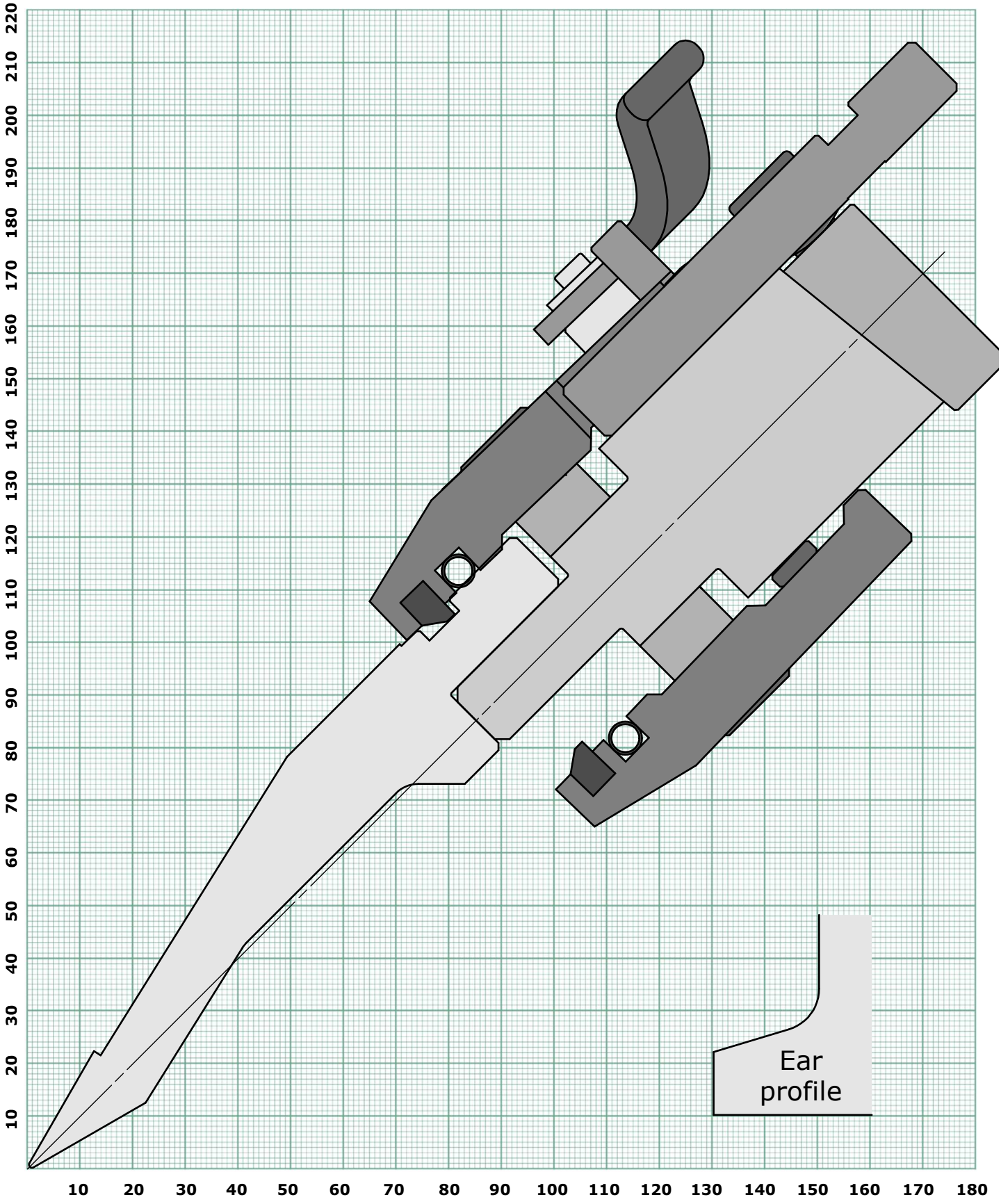

RETURN BEND LIMIT GRAPH

PUNCH 803

Back to index

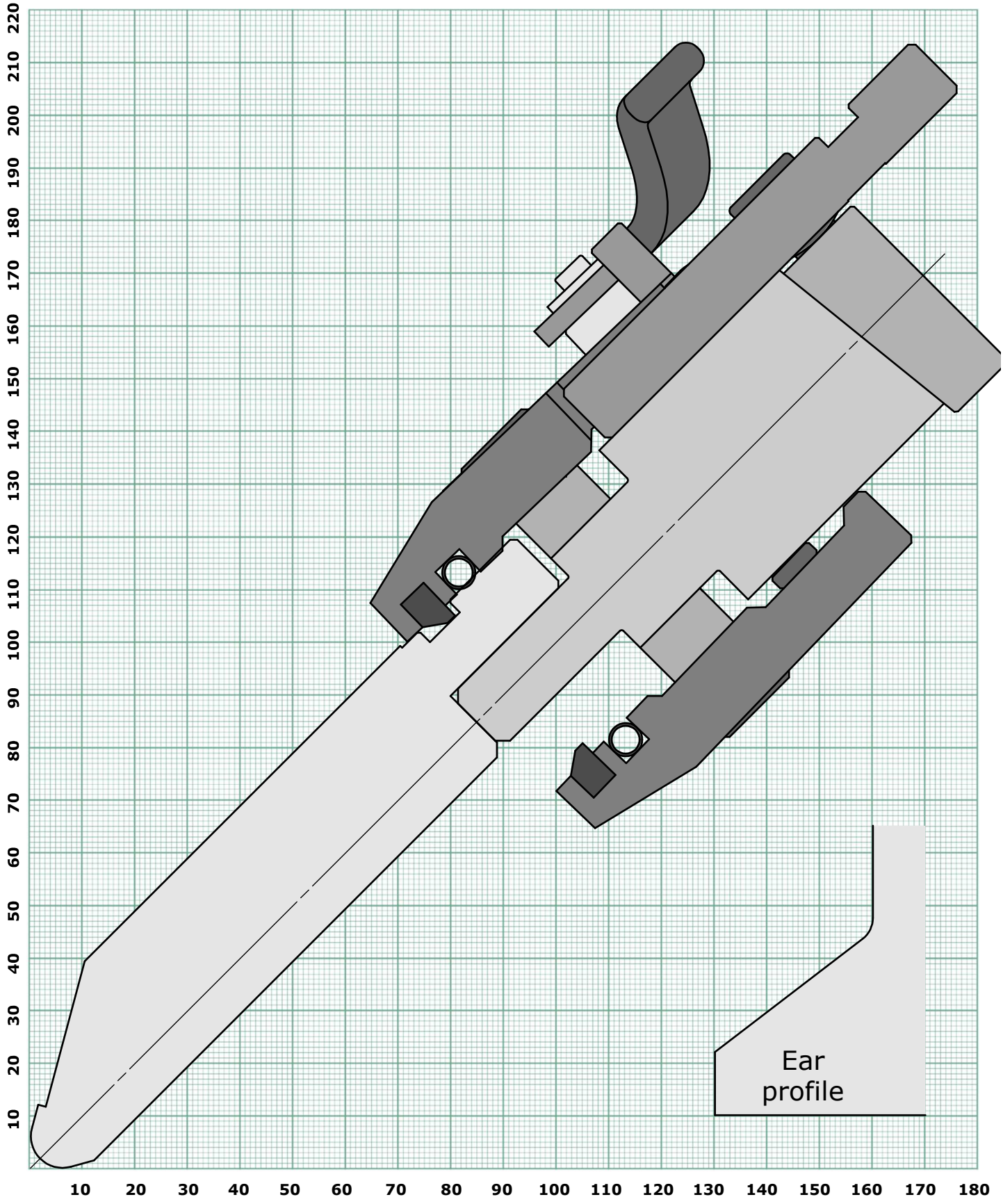

RETURN BEND LIMIT GRAPH

PUNCH 704

Back to index

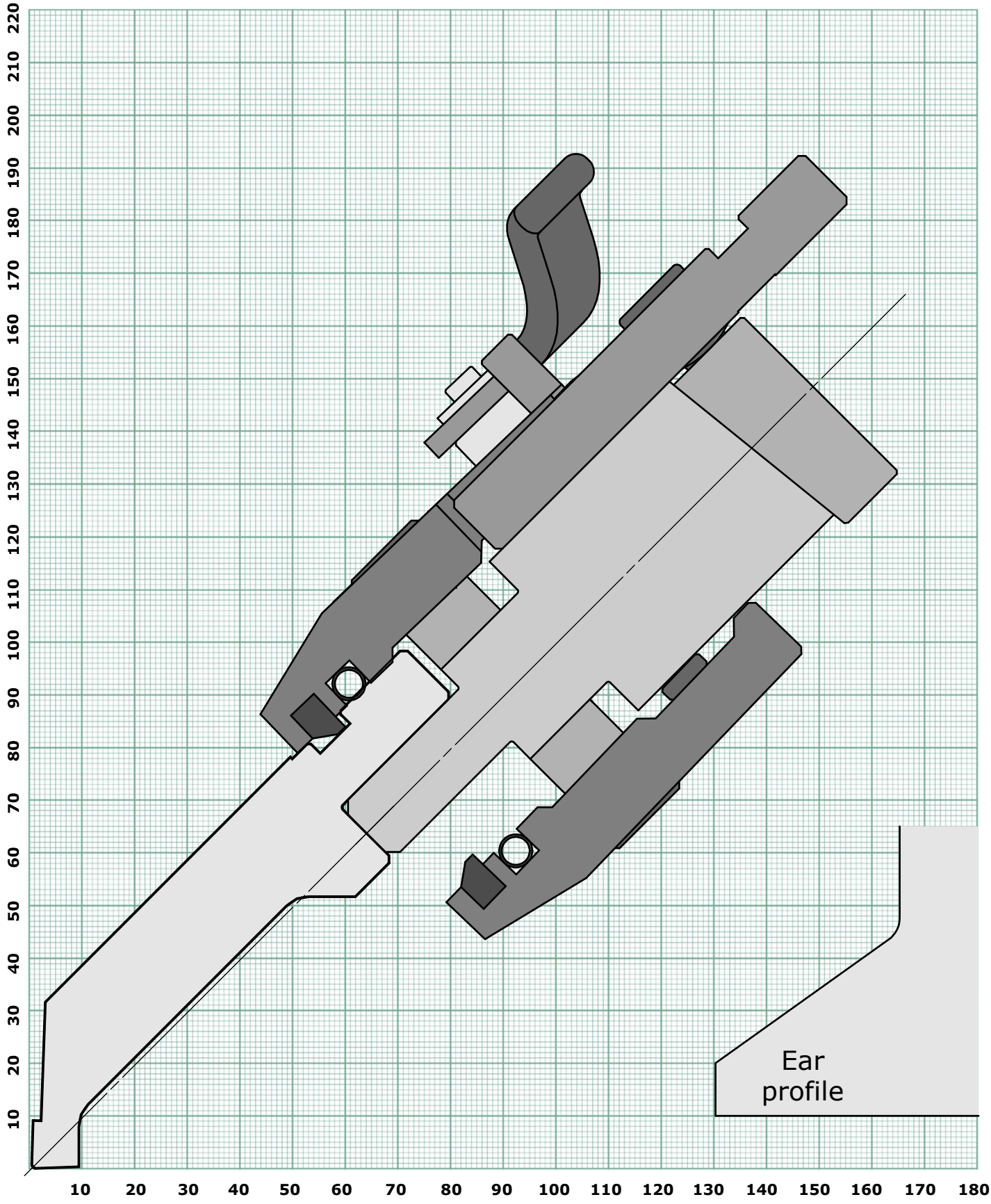

AMADA

RETURN BEND LIMIT GRAPH

PUNCH 747

Back to index

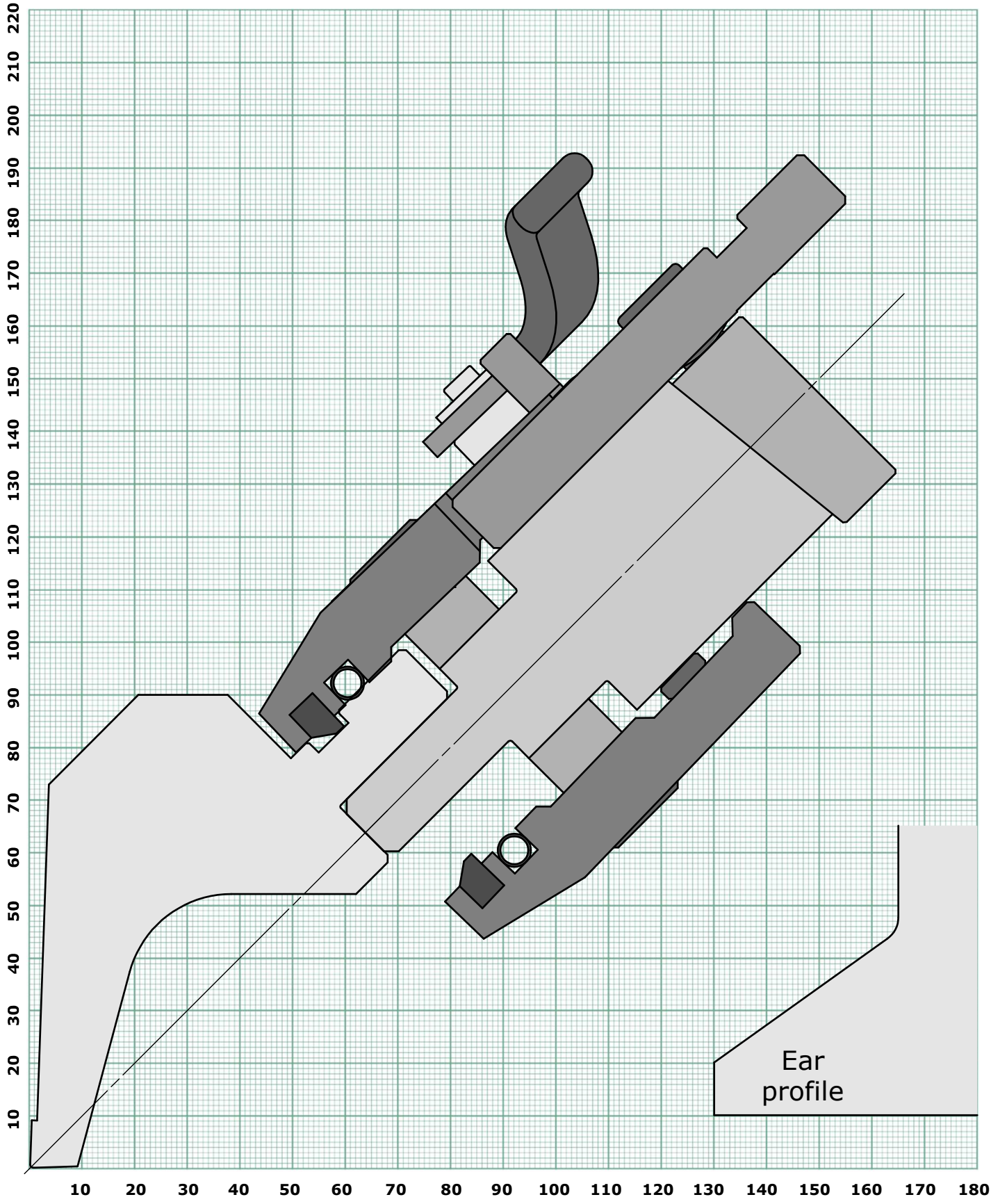

AMADA

RETURN BEND LIMIT GRAPH

PUNCH 720

Back to index

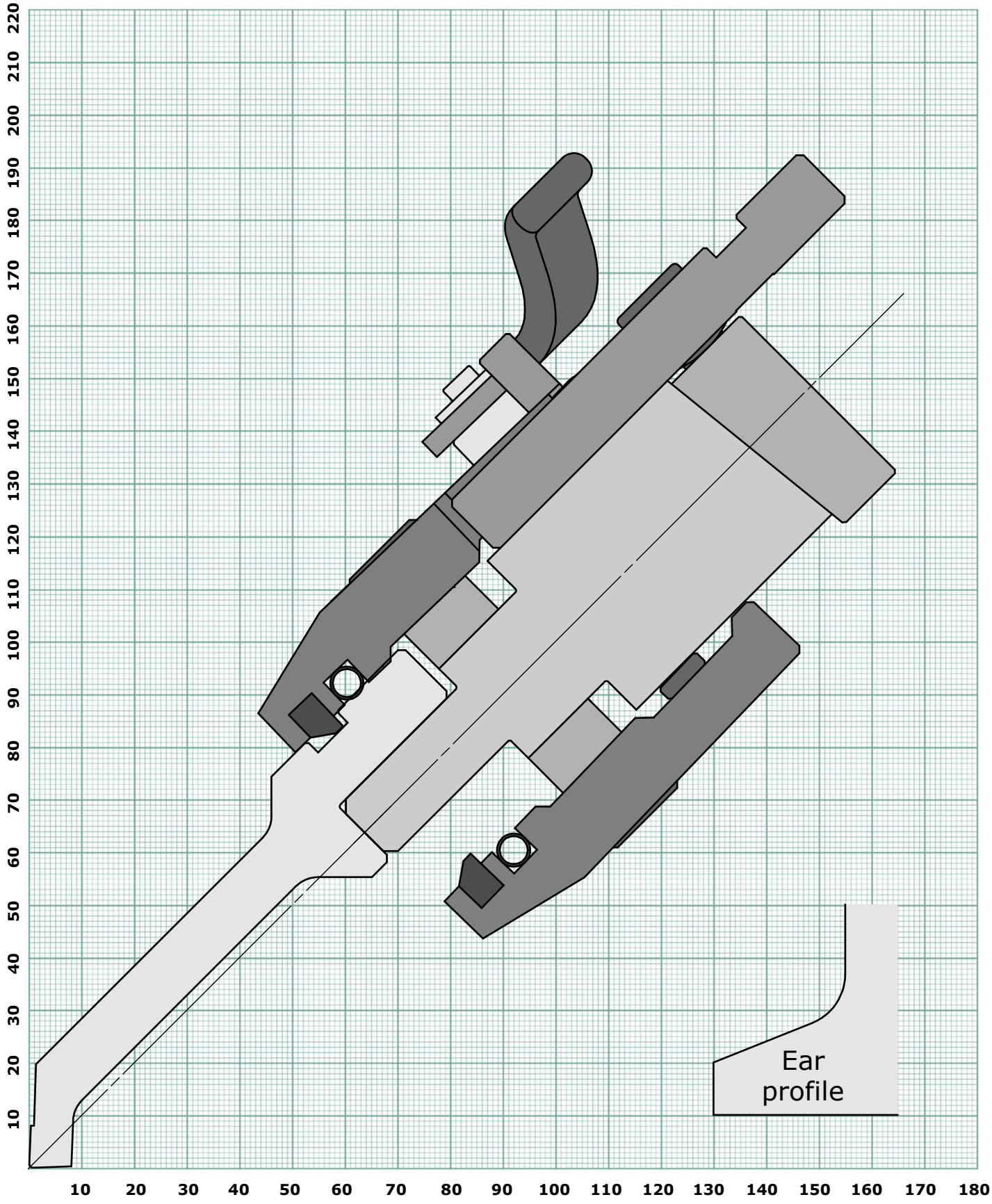

AMADA

RETURN BEND LIMIT GRAPH

PUNCH 746

Back to index

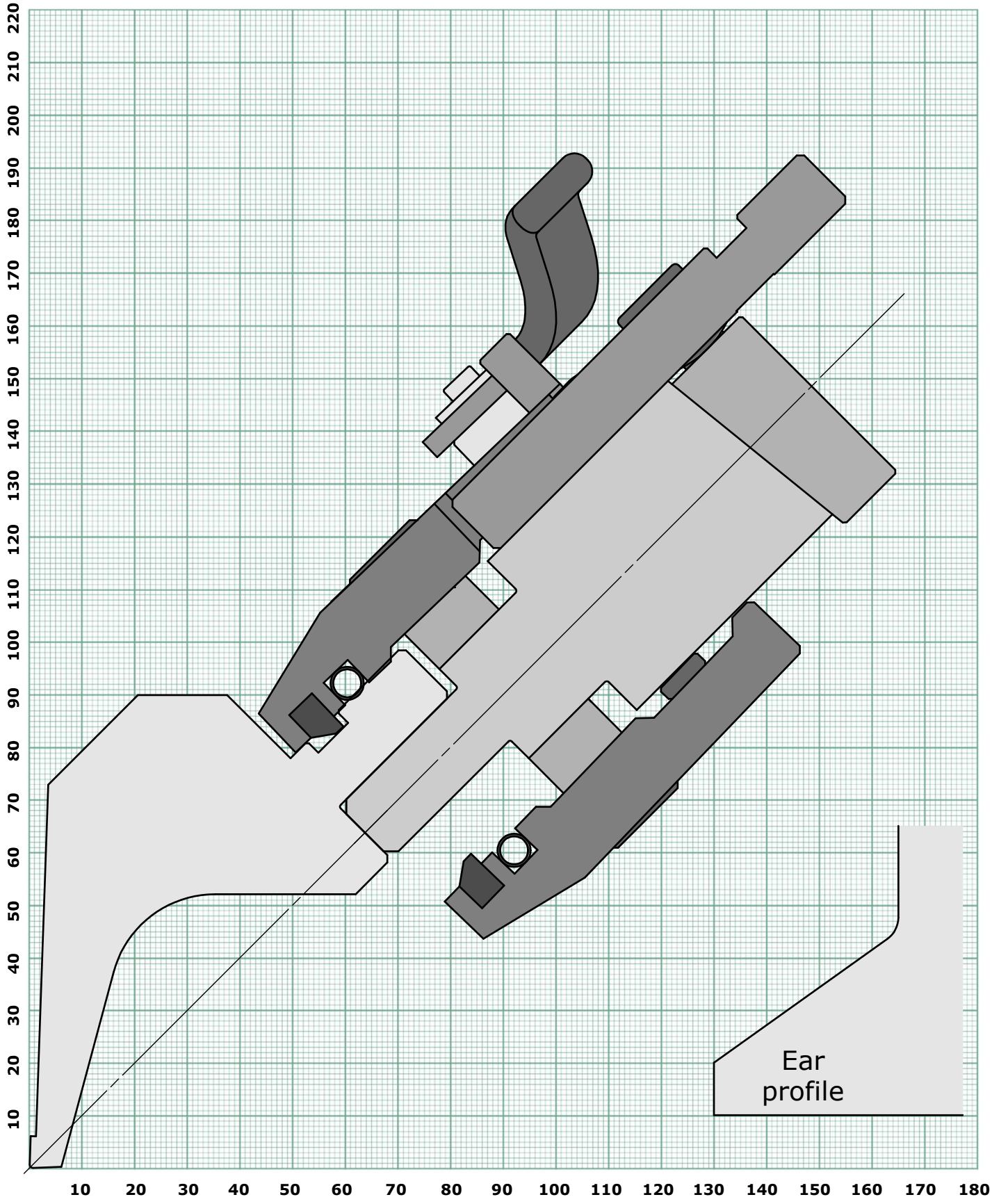

RETURN BEND LIMIT GRAPH

PUNCH 717

Back to index

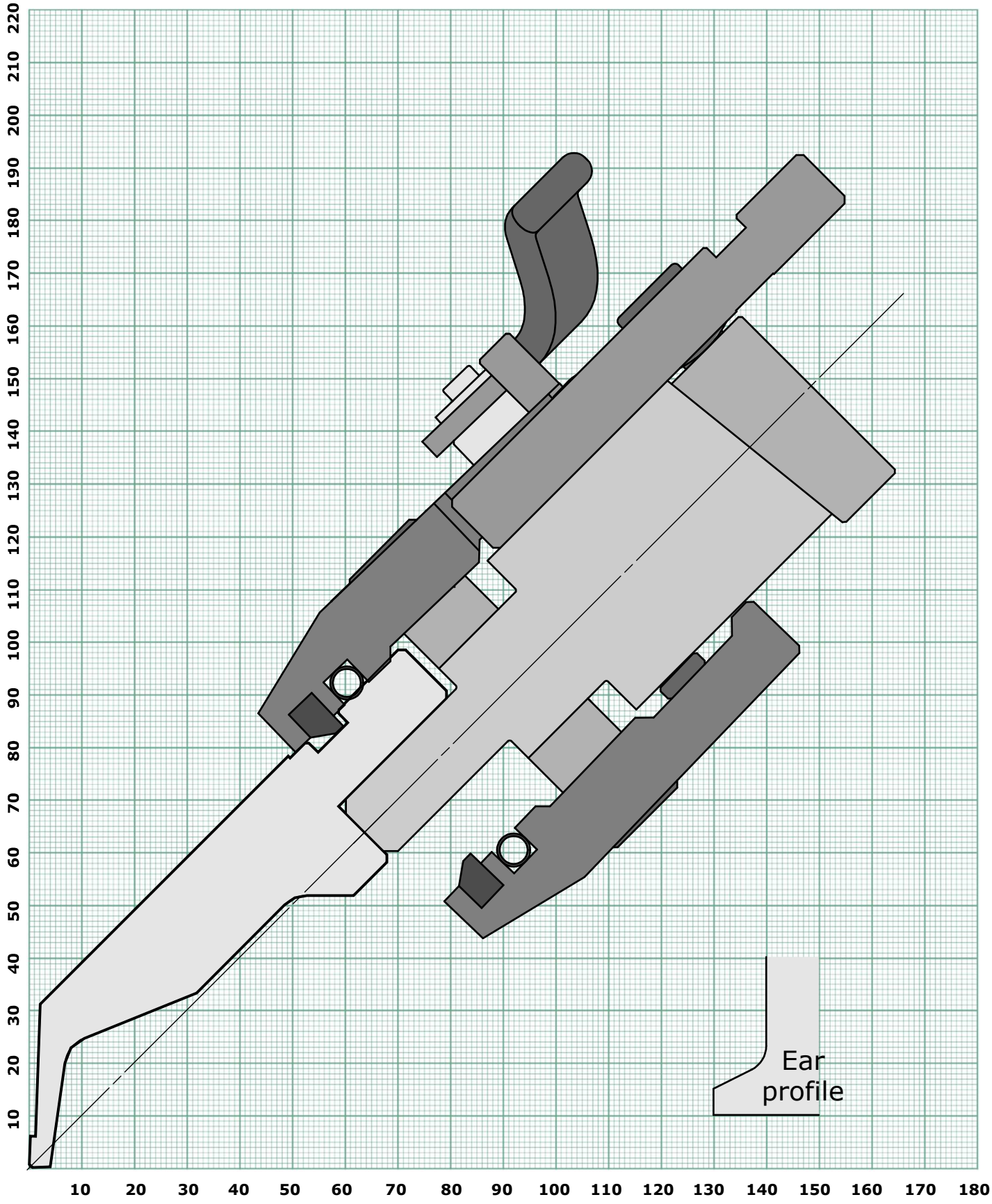

RETURN BEND LIMIT GRAPH

PUNCH 713

Back to index

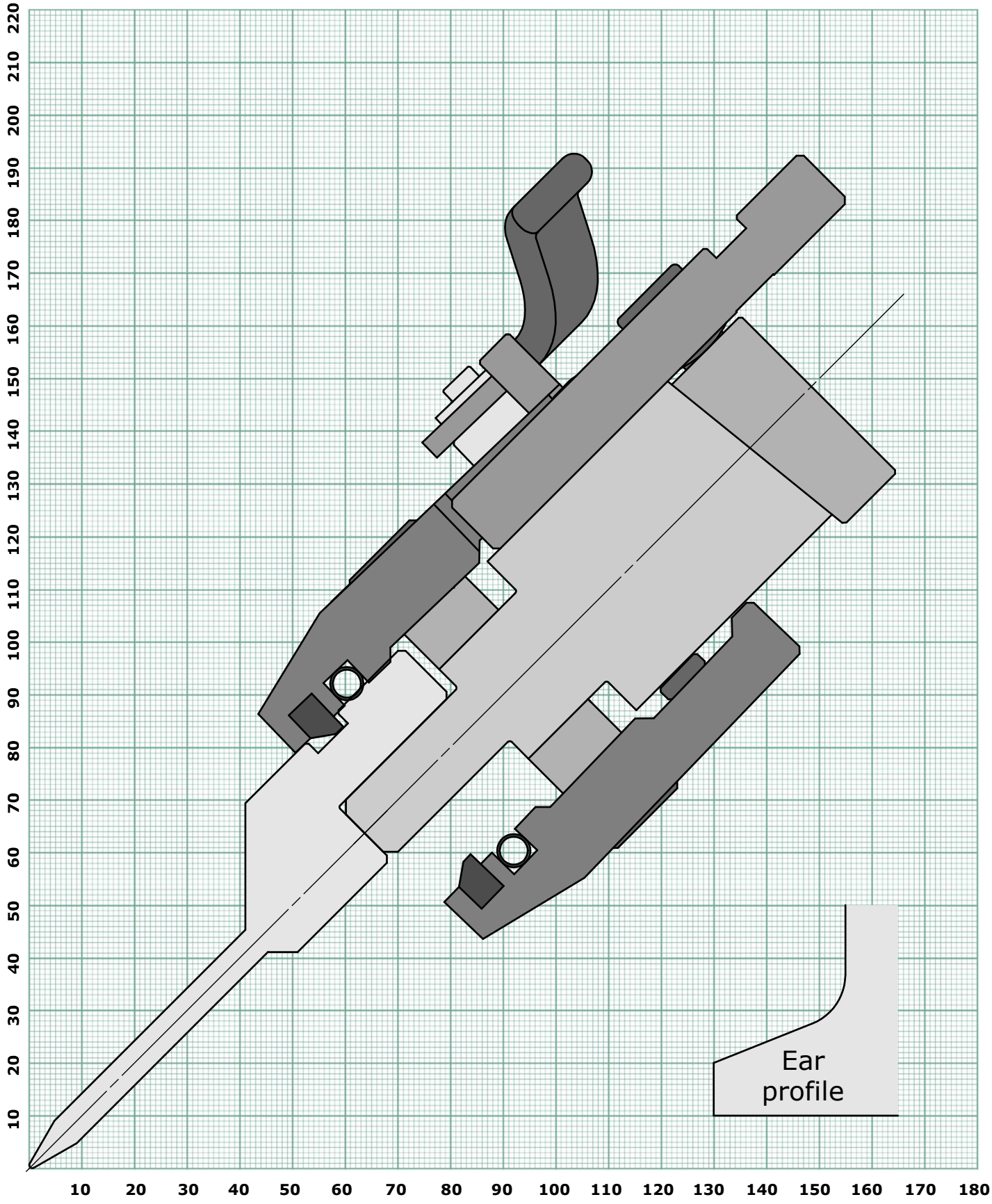

RETURN BEND LIMIT GRAPH

PUNCH 731

Back to index

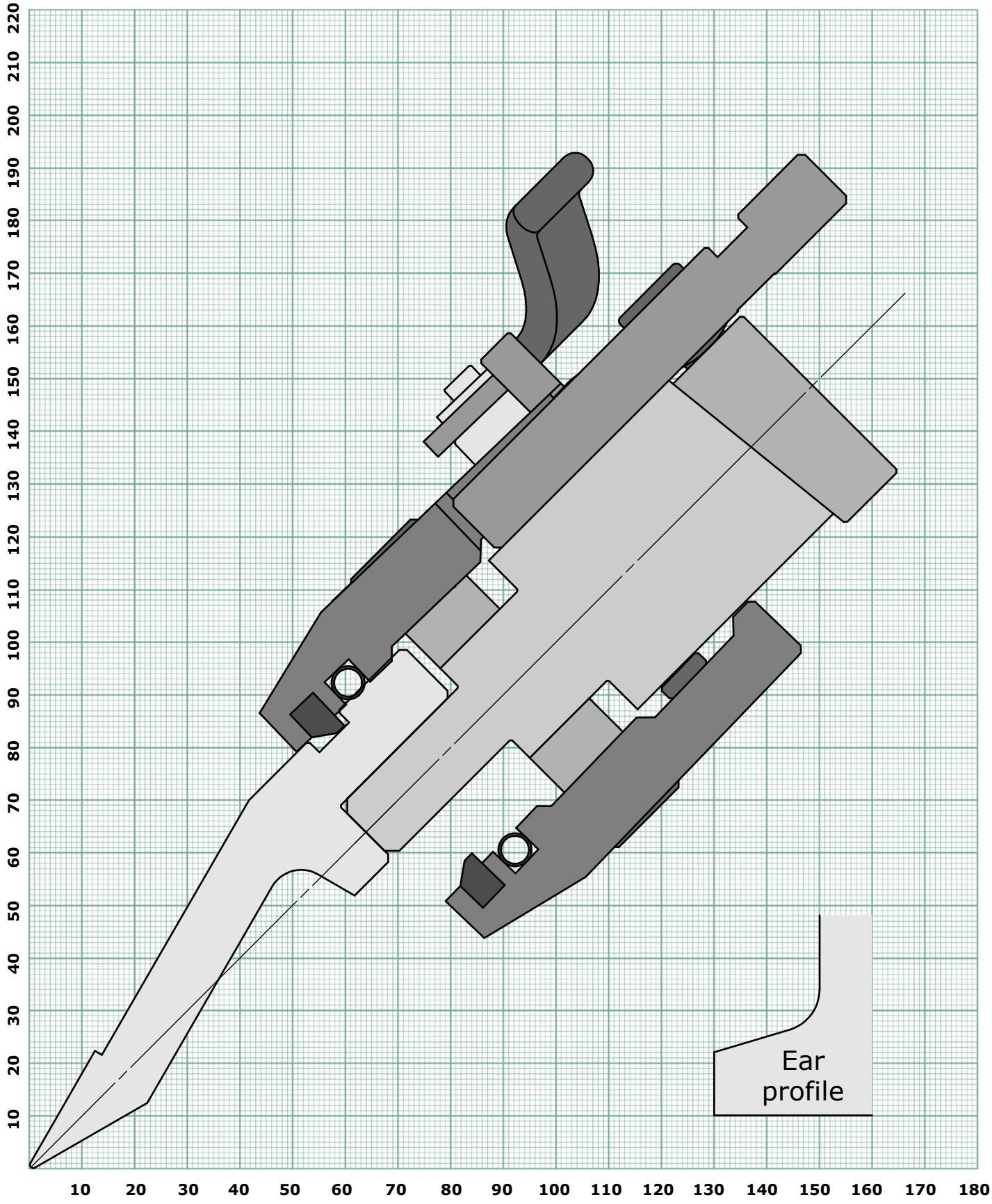

RETURN BEND LIMIT GRAPH

PUNCH 904

Back to index

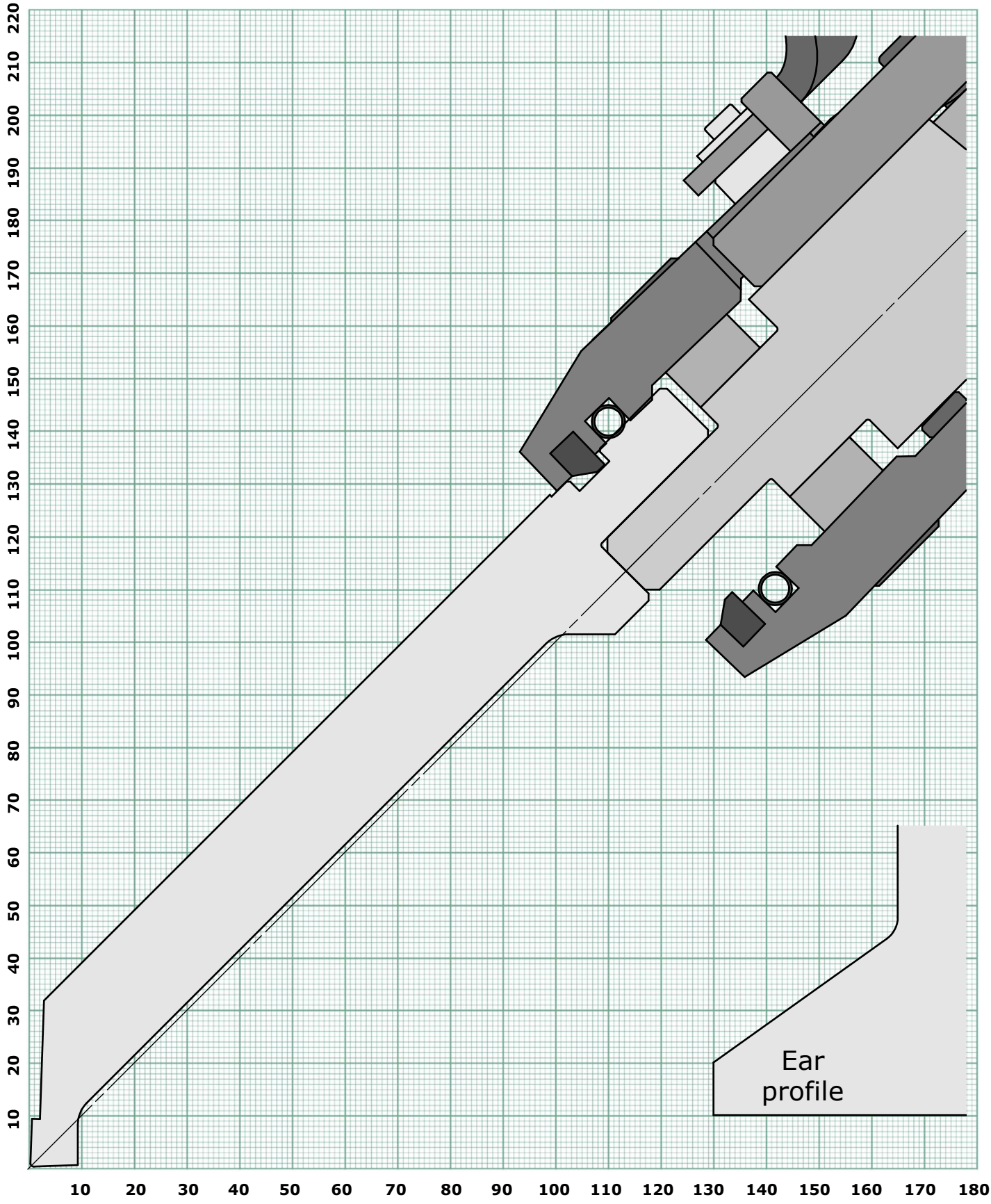

AMADA

RETURN BEND LIMIT GRAPH

PUNCH 914

Back to index

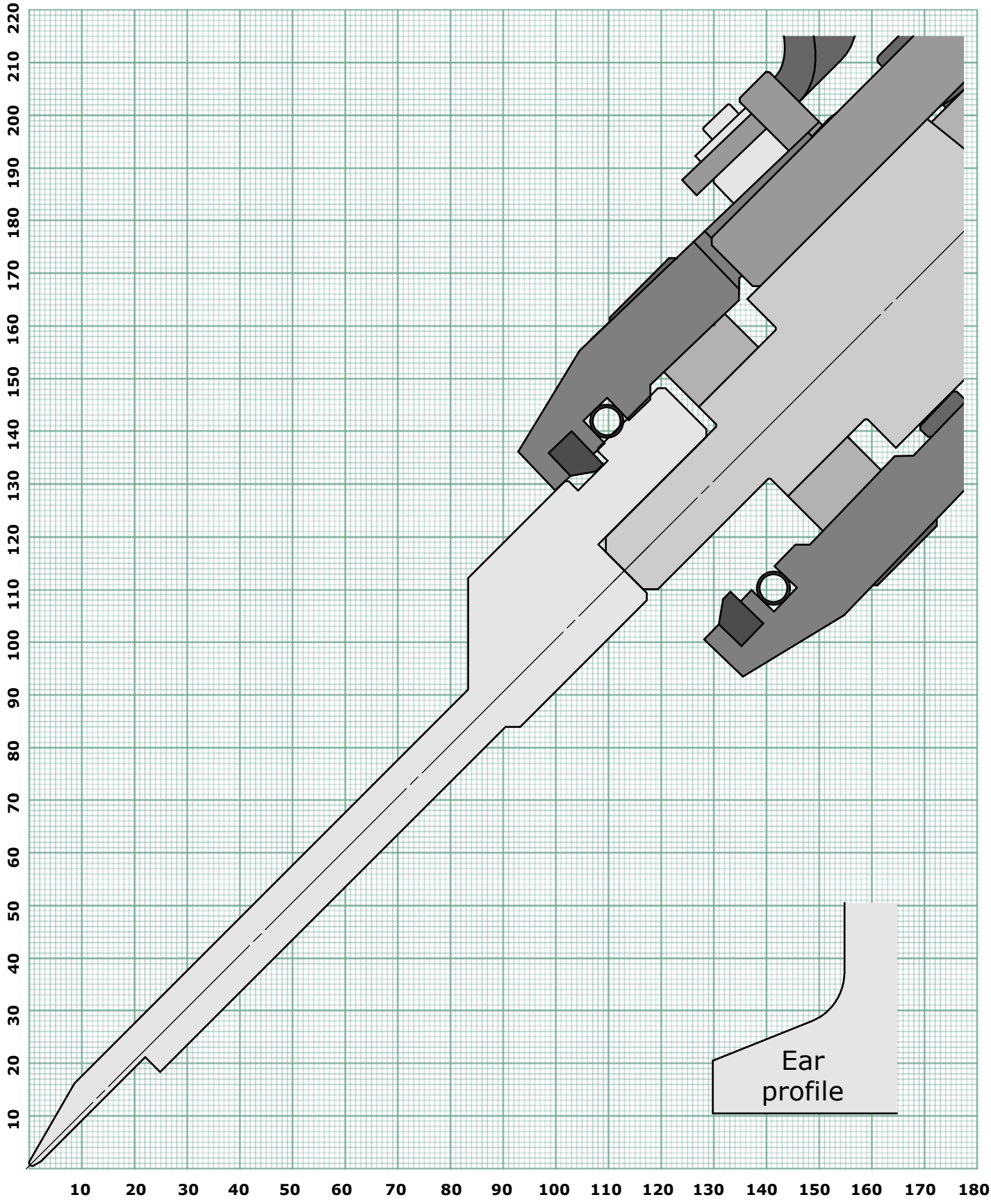

RETURN BEND LIMIT GRAPH

PUNCH 947

Back to index

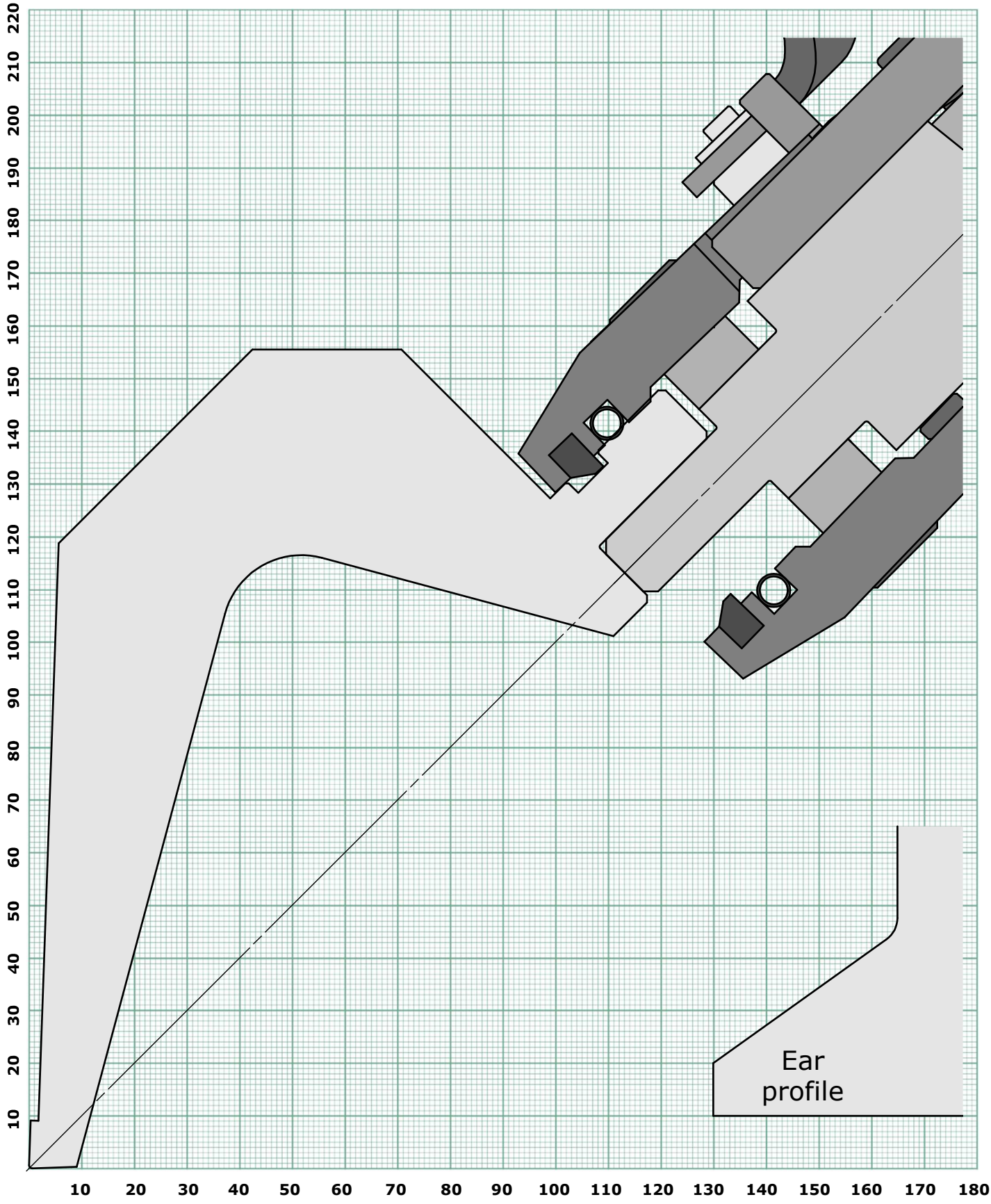

RETURN BEND LIMIT GRAPH

PUNCH 604

Back to index

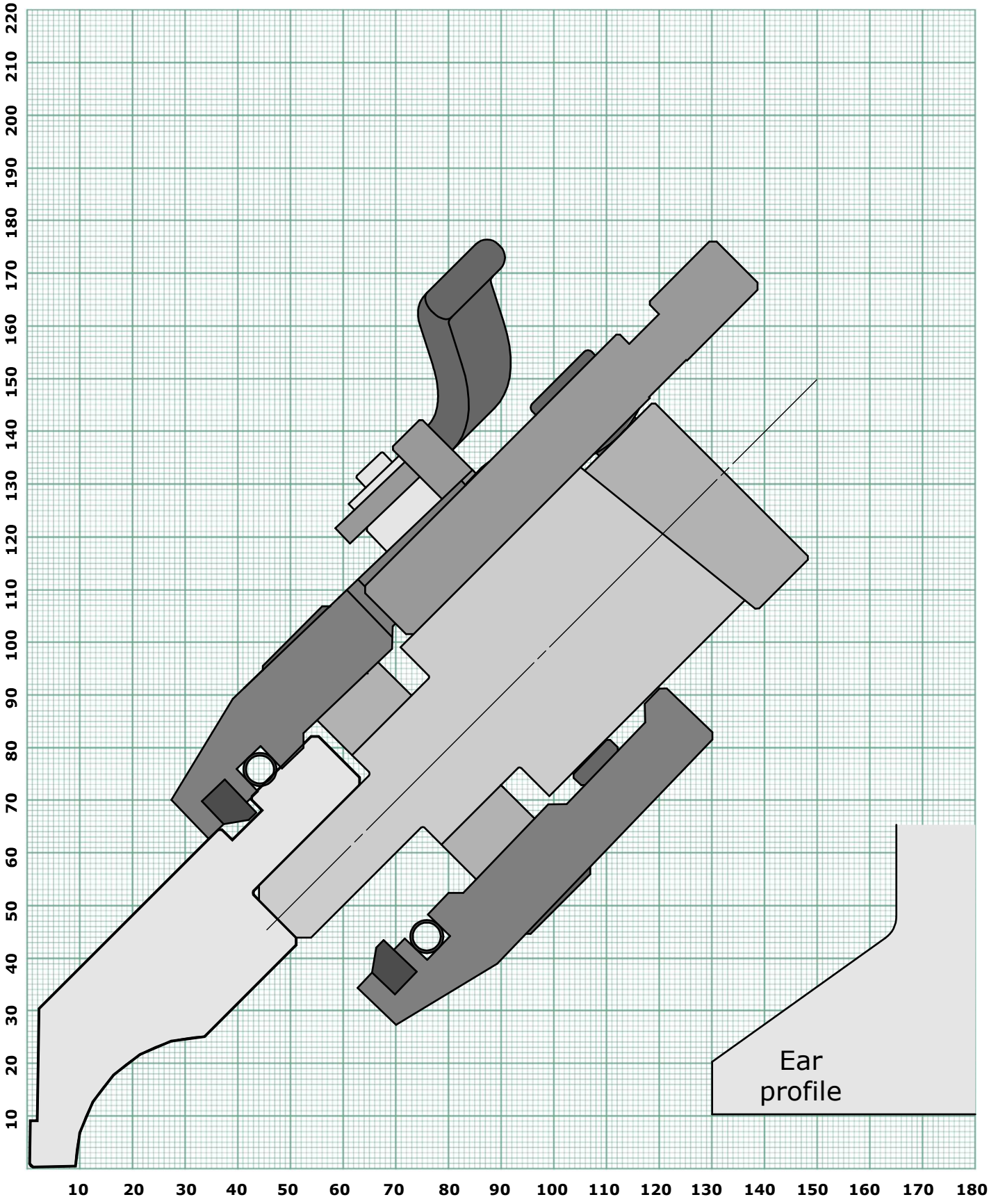

RETURN BEND LIMIT GRAPH

PUNCH 617

Back to index

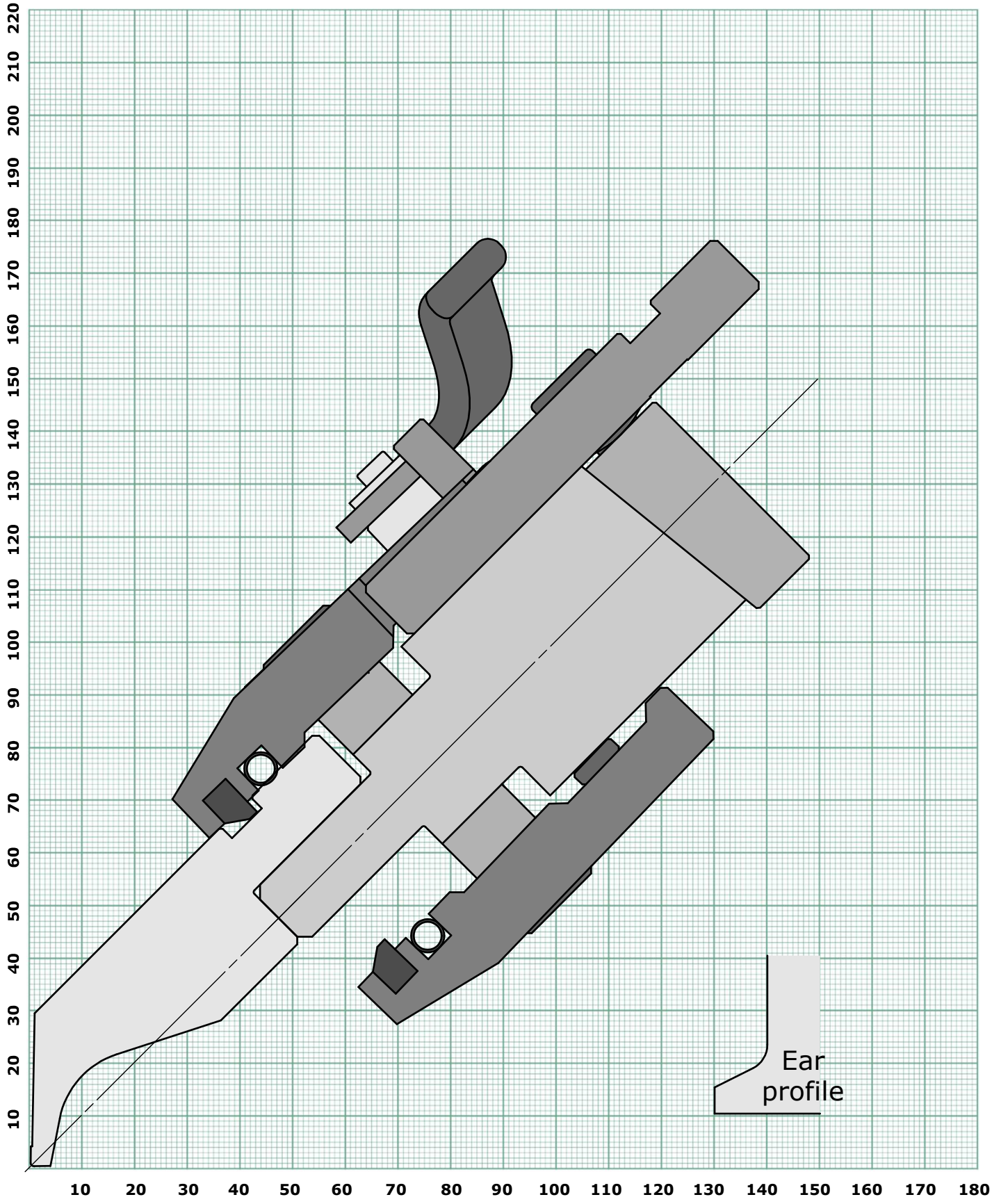

RETURN BEND LIMIT GRAPH

PUNCH 603

Back to index

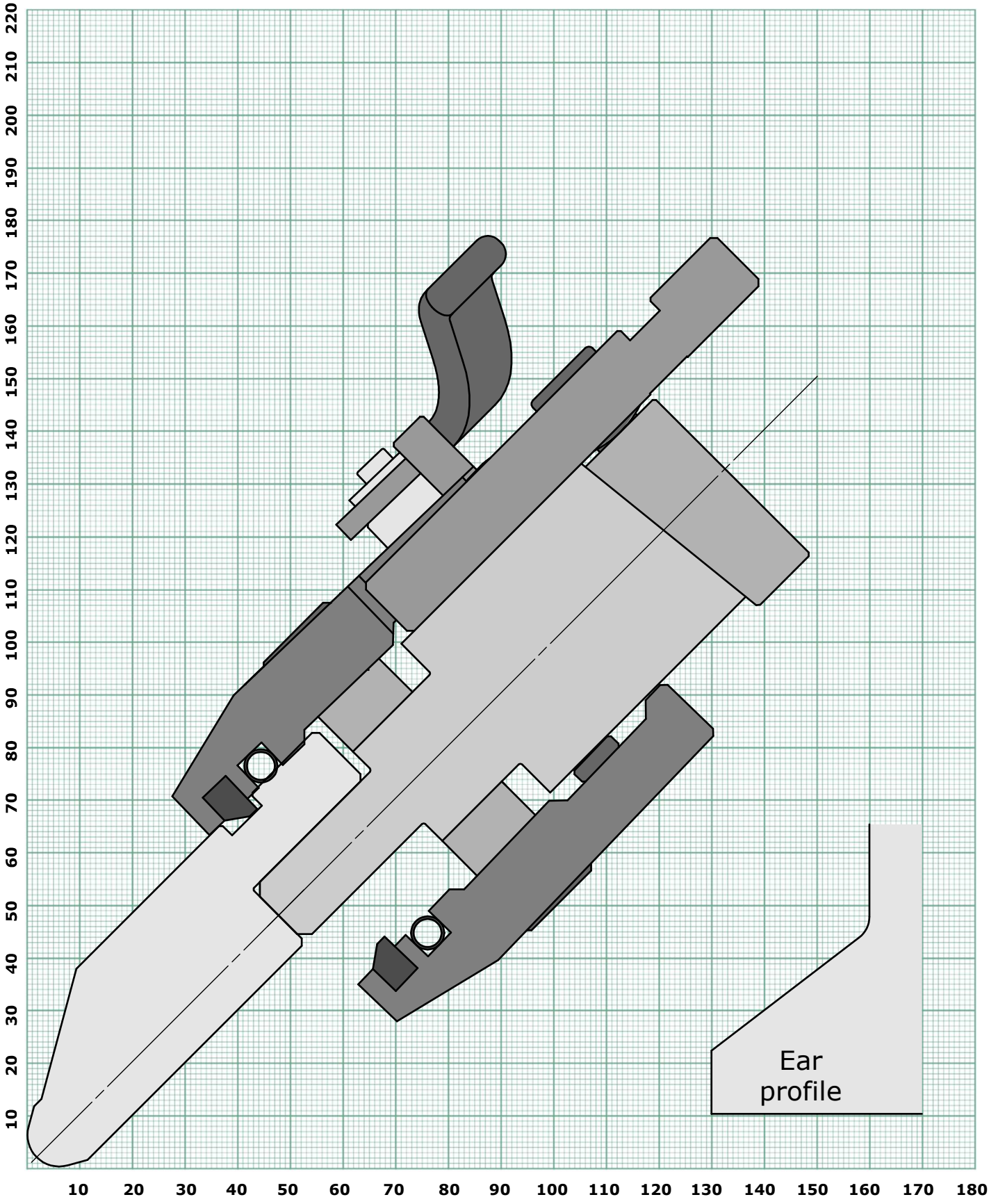

RETURN BEND LIMIT GRAPH

PUNCH 640

Back to index

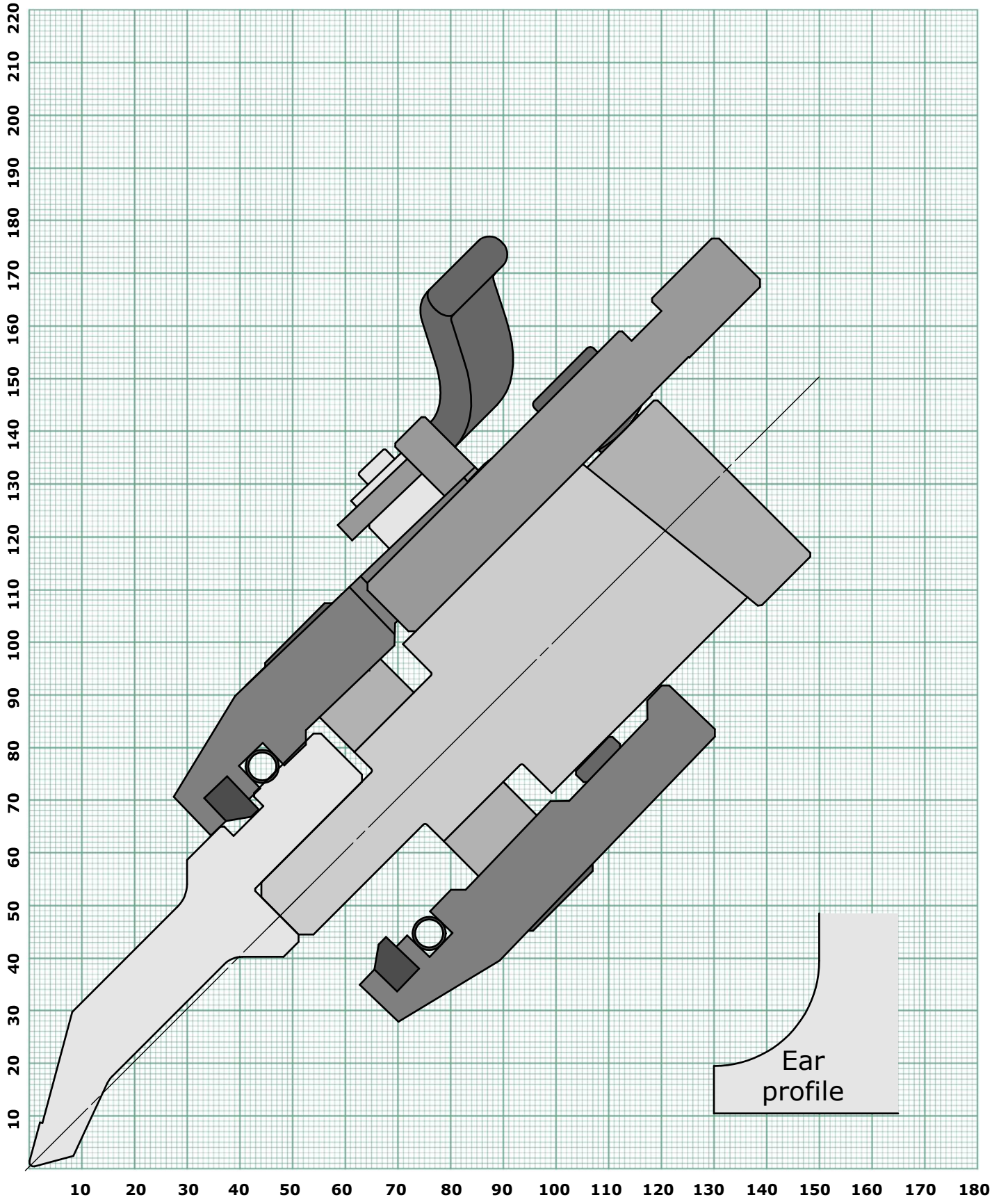

RETURN BEND LIMIT GRAPH

PUNCH 631
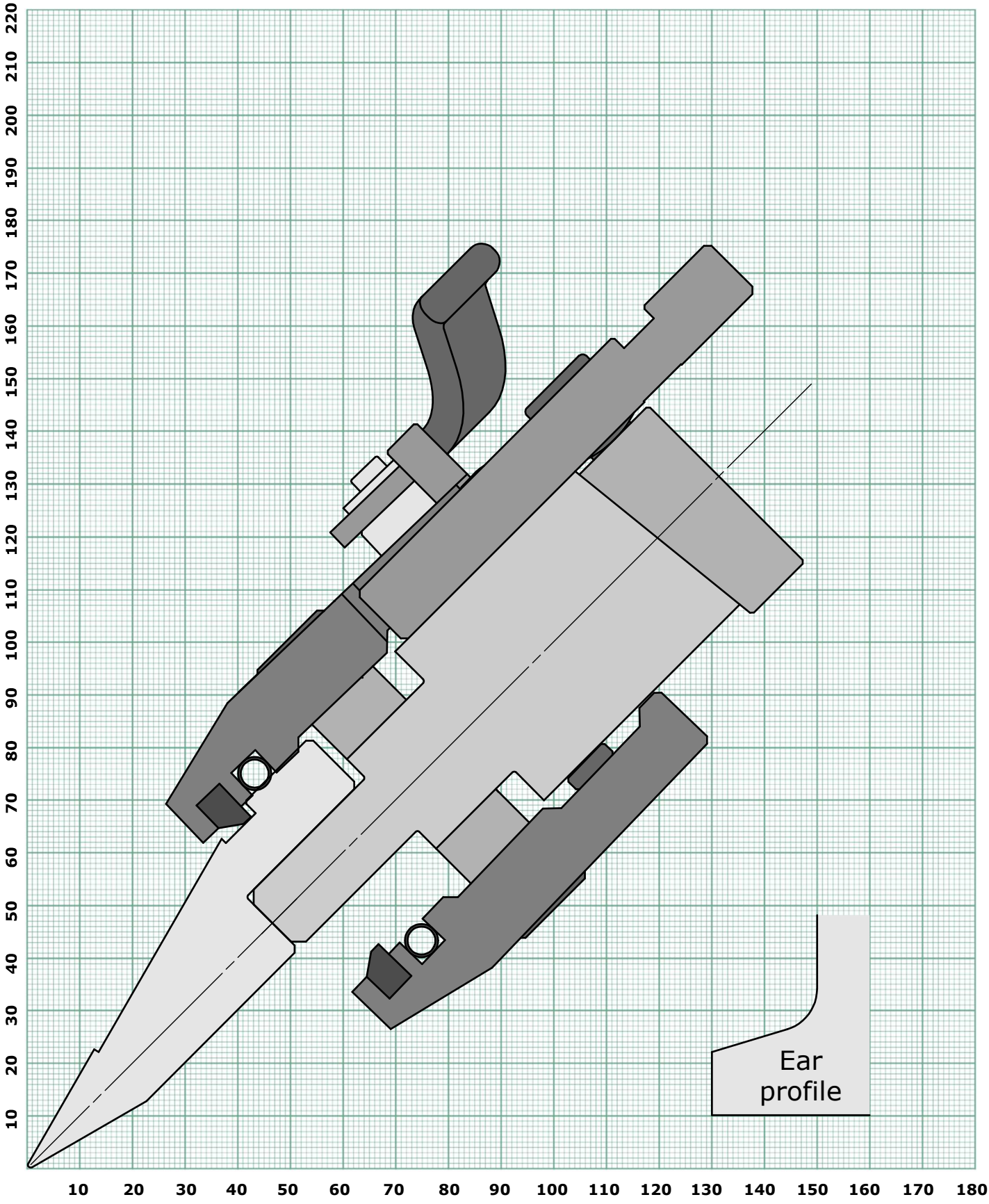
Back to index